SECTION BL

BODY, LOCK & SECURITY SYSTEM

CONTENTS

PRECAUTIONS **4**
Precautions for Supplemental Restraint System (SRS) “AIR BAG” and “SEAT BELT PRE-TENSIONER” 4
Precautions for Work 4
PREPARATION **5**
Special Service Tools 5
Commercial Service Tools 5
SQUEAK AND RATTLE TROUBLE DIAGNOSES **6**
Work Flow 6
CUSTOMER INTERVIEW 6
DUPLICATE THE NOISE AND TEST DRIVE 7
CHECK RELATED SERVICE BULLETINS 7
LOCATE THE NOISE AND IDENTIFY THE ROOT CAUSE 7
REPAIR THE CAUSE 7
CONFIRM THE REPAIR 8
Generic Squeak and Rattle Troubleshooting 8
INSTRUMENT PANEL 8
CENTER CONSOLE 8
DOORS 8
TRUNK 9
SUNROOF/HEADLINING 9
SEATS 9
UNDERHOOD 9
Diagnostic Worksheet 10
HOOD **12**
Fitting Adjustment 12
LONGITUDINAL AND LATERAL CLEARANCE ADJUSTMENT 12
FRONT END HEIGHT ADJUSTMENT 13
SURFACE HEIGHT ADJUSTMENT 14
Removal and Installation of Hood Assembly 15
REMOVAL 15
INSTALLATION 15
Removal and Installation of Hood Lock Control 16
REMOVAL 16
INSTALLATION 17
Hood Lock Control Inspection 17
FRONT FENDER **18**
Removal and Installation 18
REMOVAL 18
INSTALLATION 18
DOOR **19**
Fitting Adjustment 19
FRONT DOOR 19
REAR DOOR 19
STRIKER ADJUSTMENT 19
Removal and Installation of Front Door 20
REMOVAL 20
INSTALLATION 20
Removal and Installation of Rear Door 20
REMOVAL 21
INSTALLATION 21
Door Weatherstrip 22
REMOVAL 22
INSTALLATION 22
POWER DOOR LOCK SYSTEM **23**
Component Parts and Harness Connector Location 23
System Description 23
OPERATION 23
DOOR LOCK/UNLOCK SWITCH (POWER WINDOW MAIN SWITCH) OPERATION 24
DOOR LOCK/UNLOCK SWITCH (PASSENGER SIDE) OPERATION 24
DOOR KEY CYLINDER SWITCH OPERATION 24
KEY REMINDER SYSTEM 25
Schematic 26
Wiring Diagram — D/LOCK — 27
Terminal and Reference Value for Smart Entrance Control Unit 32
Symptom Chart 33
Smart Entrance Control Unit Power Supply and Ground Circuit Check 33
Power Window Main Switch (Door Lock/Unlock Switch) Check 34
Door Lock/Unlock Switch (Passenger Side) Check 35
Door Key Cylinder Switch (Driver Side) Check 36
Door Key Cylinder Switch (Passenger Side) Circuit

Check 37
Front Door Lock Actuator (Driver Side) Check 38
Front Door Lock Actuator (Passenger Side) Check 39
Rear Door Lock Actuator LH Check 40
Rear Door Lock Actuator RH Check 40
Back Door Lock Actuator Check 41
Front Door Switch (Driver Side) Check 42
All Door Switch Check 42
Key Switch Check 44
MULTI-REMOTE CONTROL SYSTEM 45
Component Parts and Harness Connector Location 45
System Description 45
INPUTS 45
OPERATED PROCEDURE 46
Schematic 48
Wiring Diagram — MULTI — 49
Terminal and Reference Value for Smart Entrance Control Unit 55
Symptom Chart 56
Remote Controller Battery Check 57
ACC Switch Circuit Check 57
Power Supply and Ground Circuit Check 57
Front Door Switch (Driver Side) Circuit Check 59
All Door Switch Circuit Check 59
Key Switch Circuit Check 60
Hazard Reminder Check 61
Horn Reminder Check 62
Interior Room Lamp Operation Check 62
ID Code Entry Procedure 63
KEY FOB ID SET UP 63
Key Fob Battery Replacement 64
FRONT DOOR LOCK 65
Component Parts Location 65
Inspection and Adjustment 65
OUT SIDE HANDLE ROD ADJUSTMENT 65
Removal and Installation 65
REMOVAL 65
INSTALLATION 66
Disassembly and Assembly 67
DISASSEMBLY 67
ASSEMBLY 67
REAR DOOR LOCK 68
Component Parts Location 68
Inspection and Adjustment 68
OUT SIDE HANDLE ROD ADJUSTMENT 68
Removal and Installation 68
REMOVAL 68
INSTALLATION 69
Disassembly and Assembly 70
DISASSEMBLY 70
ASSEMBLY 70
BACK DOOR 71
Fitting Adjustment 71
VERTICAL/LATERAL CLEARANCE ADJUSTMENT 71
Back Door Assembly 72
REMOVAL AND INSTALLATION 72
INSPECTION 73
Removal and Installation of Back Door Handle 73
REMOVAL 73
INSTALLATION 73
Removal and Installation of Back Door Lock and Actuator 73
REMOVAL 73
INSTALLATION 73
Disassembly and Assembly of Back Door Lock & Back Door Lock Actuator 73
DISASSEMBLY 73
ASSEMBLY 74
Removal and Installation of Back Door Weatherstrip 74
REMOVAL 74
INSTALLATION 74
FUEL FILLER LID OPENER 75
Component Parts Location 75
Removal and Installation of Fuel Filler Lid Opener Cable 75
REMOVAL 75
INSTALLATION 75
VEHICLE SECURITY (THEFT WARNING) SYSTEM 76
Component Parts and Harness Connector Location 76
System Description 77
DESCRIPTION 77
POWER SUPPLY AND GROUND 78
INITIAL CONDITION TO ACTIVATE THE SYSTEM 78
THEFT WARNING SYSTEM ACTIVATION 78
THEFT WARNING SYSTEM ALARM OPERATION 78
THEFT WARNING SYSTEM DEACTIVATION 79
PANIC ALARM OPERATION 79
Schematic 80
Wiring Diagram — VEHSEC — 81
Terminals and Reference Value for Smart Entrance Control Unit 86
Preliminary Check 87
Symptom Chart 88
Diagnostic Procedure 1 89
Diagnostic Procedure 2 90
Diagnostic Procedure 3 90
Diagnostic Procedure 4 91
Diagnostic Procedure 5 92
Diagnostic Procedure 6 94
Diagnostic Procedure 7 94
Diagnostic Procedure 8 96
NVIS (NISSAN VEHICLE IMMOBILIZER SYSTEM-NATS) 97
Component Parts and Harness Connector Location 97
System Description 98
System Composition 98
ECM Re-communicating Function 99
Wiring Diagram — NATS — 100
CONSULT-II 101
CONSULT-II INSPECTION PROCEDURE 101
CONSULT-II DIAGNOSTIC TEST MODE FUNCTION 102
HOW TO READ SELF-DIAGNOSTIC RESULTS 102
NVIS (NATS) SELF-DIAGNOSTIC RESULTS ITEM CHART 103

Work Flow 104
Trouble Diagnoses 105
SYMPTOM MATRIX CHART 1 105
SYMPTOM MATRIX CHART 2 106
DIAGNOSTIC SYSTEM DIAGRAM 106
Diagnostic Procedure 1 107
Diagnostic Procedure 2 107
Diagnostic Procedure 3 110
Diagnostic Procedure 4 111
Diagnostic Procedure 5 112
Diagnostic Procedure 6 113
Diagnostic Procedure 7 114
How to Replace NATS IMMU 115
BODY REPAIR 116
Body Exterior Paint Color 116
Body Component Parts 117
UNDERBODY COMPONENT PARTS 117
BODY COMPONENT PARTS 119
Corrosion Protection 121
DESCRIPTION 121
ANTI-CORROSIVE WAX 122
UNDERCOATING 123
STONE GUARD COAT 124
Body Sealing 125
DESCRIPTION 125
Body Construction 128
BODY CONSTRUCTION 128
Body Alignment 129
BODY CENTER MARKS 129
PANEL PARTS MATCHING MARKS 130
DESCRIPTION 131
ENGINE COMPARTMENT 132
UNDERBODY 134
PASSENGER COMPARTMENT 136
REAR BODY 138
Handling Precautions for Plastics 140
HANDLING PRECAUTIONS FOR PLASTICS . 140
LOCATION OF PLASTIC PARTS 141
Precautions in Repairing High Strength Steel 143
HIGH STRENGTH STEEL (HSS) USED IN NISSAN VEHICLES 143
Replacement Operations 146
DESCRIPTION 146
RADIATOR CORE SUPPORT 149
RADIATOR CORE SUPPORT (PARTIAL REPLACEMENT) 150
HOODLEDGE 151
HOODLEDGE (PARTIAL REPLACEMENT) 153
FRONT SIDE MEMBER 155
FRONT SIDE MEMBER (PARTIAL REPLACEMENT) 157
FRONT PILLAR 159
CENTER PILLAR 161
OUTER SILL 162
REAR FENDER 163
REAR PANEL 164
REAR FLOOR REAR 165
REAR SIDE MEMBER EXTENSION 167

PRECAUTIONS

PFP:00001

Precautions for Supplemental Restraint System (SRS) “AIR BAG” and “SEAT BELT PRE-TENSIONER”

AIS005N4

The Supplemental Restraint System such as “AIR BAG” and “SEAT BELT PRE-TENSIONER”, used along with a front seat belt, helps to reduce the risk or severity of injury to the driver and front passenger for certain types of collision. Information necessary to service the system safely is included in the SRS and SB section of this Service Manual.

WARNING:

- **To avoid rendering the SRS inoperative, which could increase the risk of personal injury or death in the event of a collision which would result in air bag inflation, all maintenance must be performed by an authorized NISSAN/INFINITI dealer.**
- **Improper maintenance, including incorrect removal and installation of the SRS, can lead to personal injury caused by unintentional activation of the system. For removal of Spiral Cable and Air Bag Module, see the SRS section.**
- **Do not use electrical test equipment on any circuit related to the SRS unless instructed to in this Service Manual. SRS wiring harnesses can be identified by yellow and/or orange harnesses or harness connectors.**

Precautions for Work

AIS005N5

- After removing and installing the opening/closing parts, be sure to carry out fitting adjustments to check their operation.
- Check the lubrication level, damage, and wear of each part. If necessary, grease or replace it.

PREPARATION

PFP:00002

Special Service Tools

AIS0063G

The actual shapes of Kent-Moore tools may differ from those of special service tools illustrated here.

Tool number (Kent-Moore No.) Tool name	Description
(J-39570) Chassis ear 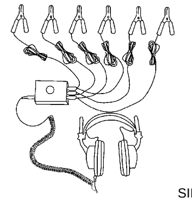 SIIA0993E	Locating the noise
(J-43980) NISSAN Squeak and Rattle Kit 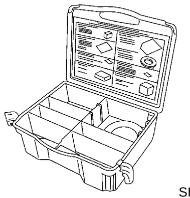 SIIA0994E	Repairing the cause of noise

Commercial Service Tools

AIS0063H

Tool name	Description
Engine ear 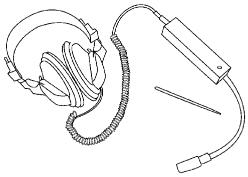 SIIA0995E	Locating the noise

SQUEAK AND RATTLE TROUBLE DIAGNOSES

PFP:00000

Work Flow

AIS0060Y

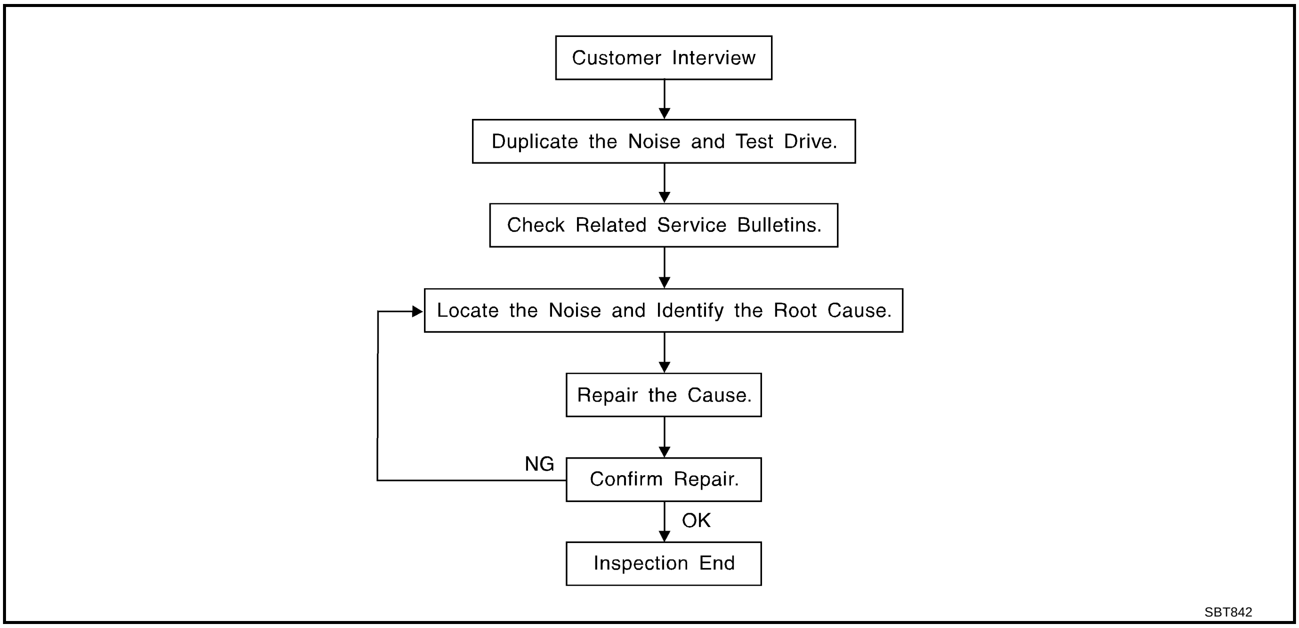

CUSTOMER INTERVIEW

Interview the customer if possible, to determine the conditions that exist when the noise occurs. Use the Diagnostic Worksheet during the interview to document the facts and conditions when the noise occurs and any customer's comments; refer to BL-10, "Diagnostic Worksheet" . This information is necessary to duplicate the conditions that exist when the noise occurs.

- The customer may not be able to provide a detailed description or the location of the noise. Attempt to obtain all the facts and conditions that exist when the noise occurs (or does not occur).
- If there is more than one noise in the vehicle, be sure to diagnose and repair the noise that the customer is concerned about. This can be accomplished by test driving the vehicle with the customer.
- After identifying the type of noise, isolate the noise in terms of its characteristics. The noise characteristics are provided so the customer, service adviser and technician are all speaking the same language when defining the noise.
- Squeak —(Like tennis shoes on a clean floor)
  Squeak characteristics include the light contact/fast movement/brought on by road conditions/hard surfaces=higher pitch noise/softer surfaces=lower pitch noises/edge to surface=chirping
- Creak—(Like walking on an old wooden floor)
  Creak characteristics include firm contact/slow movement/twisting with a rotational movement/pitch dependent on materials/often brought on by activity.
- Rattle—(Like shaking a baby rattle)
  Rattle characteristics include the fast repeated contact/vibration or similar movement/loose parts/missing clip or fastener/incorrect clearance.
- Knock —(Like a knock on a door)
  Knock characteristics include hollow sounding/sometimes repeating/often brought on by driver action.
- Tick—(Like a clock second hand)
  Tick characteristics include gentle contacting of light materials/loose components/can be caused by driver action or road conditions.
- Thump—(Heavy, muffled knock noise)
  Thump characteristics include softer knock/dead sound often brought on by activity.
- Buzz—(Like a bumble bee)
  Buzz characteristics include high frequency rattle/firm contact.
- Often the degree of acceptable noise level will vary depending upon the person. A noise that you may judge as acceptable may be very irritating to the customer.
- Weather conditions, especially humidity and temperature, may have a great effect on noise level.

DUPLICATE THE NOISE AND TEST DRIVE

If possible, drive the vehicle with the customer until the noise is duplicated. Note any additional information on the Diagnostic Worksheet regarding the conditions or location of the noise. This information can be used to duplicate the same conditions when you confirm the repair.
If the noise can be duplicated easily during the test drive, to help identify the source of the noise, try to duplicate the noise with the vehicle stopped by doing one or all of the following:
1) Close a door.
2) Tap or push/pull around the area where the noise appears to be coming from.
3) Rev the engine.
4) Use a floor jack to recreate vehicle “twist”.
5) At idle, apply engine load (electrical load, half-clutch on M/T models, drive position on A/T models).
6) Raise the vehicle on a hoist and hit a tire with a rubber hammer.

- Drive the vehicle and attempt to duplicate the conditions the customer states exist when the noise occurs.
- If it is difficult to duplicate the noise, drive the vehicle slowly on an undulating or rough road to stress the vehicle body.

CHECK RELATED SERVICE BULLETINS

After verifying the customer concern or symptom, check ASIST for Technical Service Bulletins (TSBs) related to that concern or symptom.
If a TSB relates to the symptom, follow the procedure to repair the noise.

LOCATE THE NOISE AND IDENTIFY THE ROOT CAUSE

1. Narrow down the noise to a general area. To help pinpoint the source of the noise, use a listening tool (Chassis Ear: J-39570, Engine Ear and mechanics stethoscope).
2. Narrow down the noise to a more specific area and identify the cause of the noise by:

- removing the components in the area that you suspect the noise is coming from.
  Do not use too much force when removing clips and fasteners, otherwise clips and fastener can be broken or lost during the repair, resulting in the creation of new noise.
- tapping or pushing/pulling the component that you suspect is causing the noise.
  Do not tap or push/pull the component with excessive force, otherwise the noise will be eliminated only temporarily.
- feeling for a vibration with your hand by touching the component(s) that you suspect is (are) causing the noise.
- placing a piece of paper between components that you suspect are causing the noise.
- looking for loose components and contact marks.
  Refer to BL-8, "Generic Squeak and Rattle Troubleshooting" .

REPAIR THE CAUSE

- If the cause is a loose component, tighten the component securely.
- If the cause is insufficient clearance between components:
  - separate components by repositioning or loosening and retightening the component, if possible.
  - insulate components with a suitable insulator such as urethane pads, foam blocks, felt cloth tape or urethane tape. A Nissan Squeak and Rattle Kit (J-43980) is available through your authorized Nissan Parts Department.

CAUTION:
Do not use excessive force as many components are constructed of plastic and may be damaged.

NOTE:
Always check with the Parts Department for the latest parts information.
The following materials are contained in the Nissan Squeak and Rattle Kit (J-43980). Each item can be ordered separately as needed.
URETHANE PADS [1.5 mm (0.059 in) thick]
Insulates connectors, harness, etc.
76268-9E005: 100 × 135 mm (3.94 × 5.31 in)/76884-71L01: 60 × 85 mm (2.36 × 3.35 in)/76884-71L02: 15 × 25 mm (0.59 × 0.98 in)
INSULATOR (Foam blocks)
Insulates components from contact. Can be used to fill space behind a panel.
73982-9E000: 45 mm (1.77 in) thick, 50 × 50 mm (1.97 × 1.97 in)/73982-50Y00: 10 mm (0.39 in) thick, 50 × 50 mm (1.97 × 1.97 in)

INSULATOR (Light foam block)
80845-71L00: 30 mm (1.18 in) thick, 30 × 50 mm (1.18 × 1.97 in)
FELT CLOTHTAPE
Used to insulate where movement does not occur. Ideal for instrument panel applications.
68370-4B000: 15 × 25 mm (0.59 × 0.98 in) pad/68239-13E00: 5 mm (0.20 in) wide tape roll
The following materials, not found in the kit, can also be used to repair squeaks and rattles.
UHMW (TEFLON) TAPE
Insulates where slight movement is present. Ideal for instrument panel applications.
SILICONE GREASE
Used in place of UHMW tape that will be visible or not fit. Will only last a few months.
SILICONE SPRAY
Use when grease cannot be applied.
DUCT TAPE
Use to eliminate movement.

CONFIRM THE REPAIR

Confirm that the cause of a noise is repaired by test driving the vehicle. Operate the vehicle under the same conditions as when the noise originally occurred. Refer to the notes on the Diagnostic Worksheet.

Generic Squeak and Rattle Troubleshooting

AIS0060Z

Refer to Table of Contents for specific component removal and installation information.

INSTRUMENT PANEL

Most incidents are caused by contact and movement between:

1. The cluster lid A and instrument panel
2. Acrylic lens and combination meter housing
3. Instrument panel to front pillar garnish
4. Instrument panel to windshield
5. Instrument panel mounting pins
6. Wiring harnesses behind the combination meter
7. A/C defroster duct and duct joint

These incidents can usually be located by tapping or moving the components to duplicate the noise or by pressing on the components while driving to stop the noise. Most of these incidents can be repaired by applying felt cloth tape or silicon spray (in hard to reach areas). Urethane pads can be used to insulate wiring harness.

CAUTION:

Do not use silicone spray to isolate a squeak or rattle. If you saturate the area with silicone, you will not be able to recheck the repair.

CENTER CONSOLE

Components to pay attention to include:

1. Shifter assembly cover to finisher
2. A/C control unit and cluster lid C
3. Wiring harnesses behind audio and A/C control unit

The instrument panel repair and isolation procedures also apply to the center console.

DOORS

Pay attention to the:

1. Finisher and inner panel making a slapping noise
2. Inside handle escutcheon to door finisher
3. Wiring harnesses tapping
4. Door striker out of alignment causing a popping noise on starts and stops

Tapping or moving the components or pressing on them while driving to duplicate the conditions can isolate many of these incidents. You can usually insulate the areas with felt cloth tape or insulator foam blocks from the Nissan Squeak and Rattle Kit (J-43980) to repair the noise.

TRUNK

Trunk noises are often caused by a loose jack or loose items put into the trunk by the owner.
In addition look for:

1. Trunk lid dumpers out of adjustment
2. Trunk lid striker out of adjustment
3. The trunk lid torsion bars knocking together
4. A loose license plate or bracket

Most of these incidents can be repaired by adjusting, securing or insulating the item(s) or component(s) causing the noise.

SUNROOF/HEADLINING

Noises in the sunroof/headlining area can often be traced to one of the following:

1. Sunroof lid, rail, linkage or seals making a rattle or light knocking noise
2. Sunvisor shaft shaking in the holder
3. Front or rear windshield touching headlining and squeaking

Again, pressing on the components to stop the noise while duplicating the conditions can isolate most of these incidents. Repairs usually consist of insulating with felt cloth tape.

SEATS

When isolating seat noise it's important to note the position the seat is in and the load placed on the seat when the noise is present. These conditions should be duplicated when verifying and isolating the cause of the noise.
Cause of seat noise include:

1. Headrest rods and holder
2. A squeak between the seat pad cushion and frame
3. The rear seatback lock and bracket

These noises can be isolated by moving or pressing on the suspected components while duplicating the conditions under which the noise occurs. Most of these incidents can be repaired by repositioning the component or applying urethane tape to the contact area.

UNDERHOOD

Some interior noise may be caused by components under the hood or on the engine wall. The noise is then transmitted into the passenger compartment.
Causes of transmitted underhood noise include:

1. Any component mounted to the engine wall
2. Components that pass through the engine wall
3. Engine wall mounts and connectors
4. Loose radiator mounting pins
5. Hood bumpers out of adjustment
6. Hood striker out of adjustment

These noises can be difficult to isolate since they cannot be reached from the interior of the vehicle. The best method is to secure, move or insulate one component at a time and test drive the vehicle. Also, engine RPM or load can be changed to isolate the noise. Repairs can usually be made by moving, adjusting, securing, or insulating the component causing the noise.

Diagnostic Worksheet

AIS00610

SQUEAK & RATTLE DIAGNOSTIC WORKSHEET

Dear Nissan Customer:
We are concerned about your satisfaction with your Nissan vehicle. Repairing a squeak or rattle sometimes can be very difficult. To help us fix your Nissan right the first time, please take a moment to note the area of the vehicle where the squeak or rattle occurs and under what conditions. You may be asked to take a test drive with a service advisor or technician to ensure we confirm the noise you are hearing.

I. WHERE DOES THE NOISE COME FROM? (circle the area of the vehicle)
The illustrations are for reference only, and may not reflect the actual configuration of your vehicle.

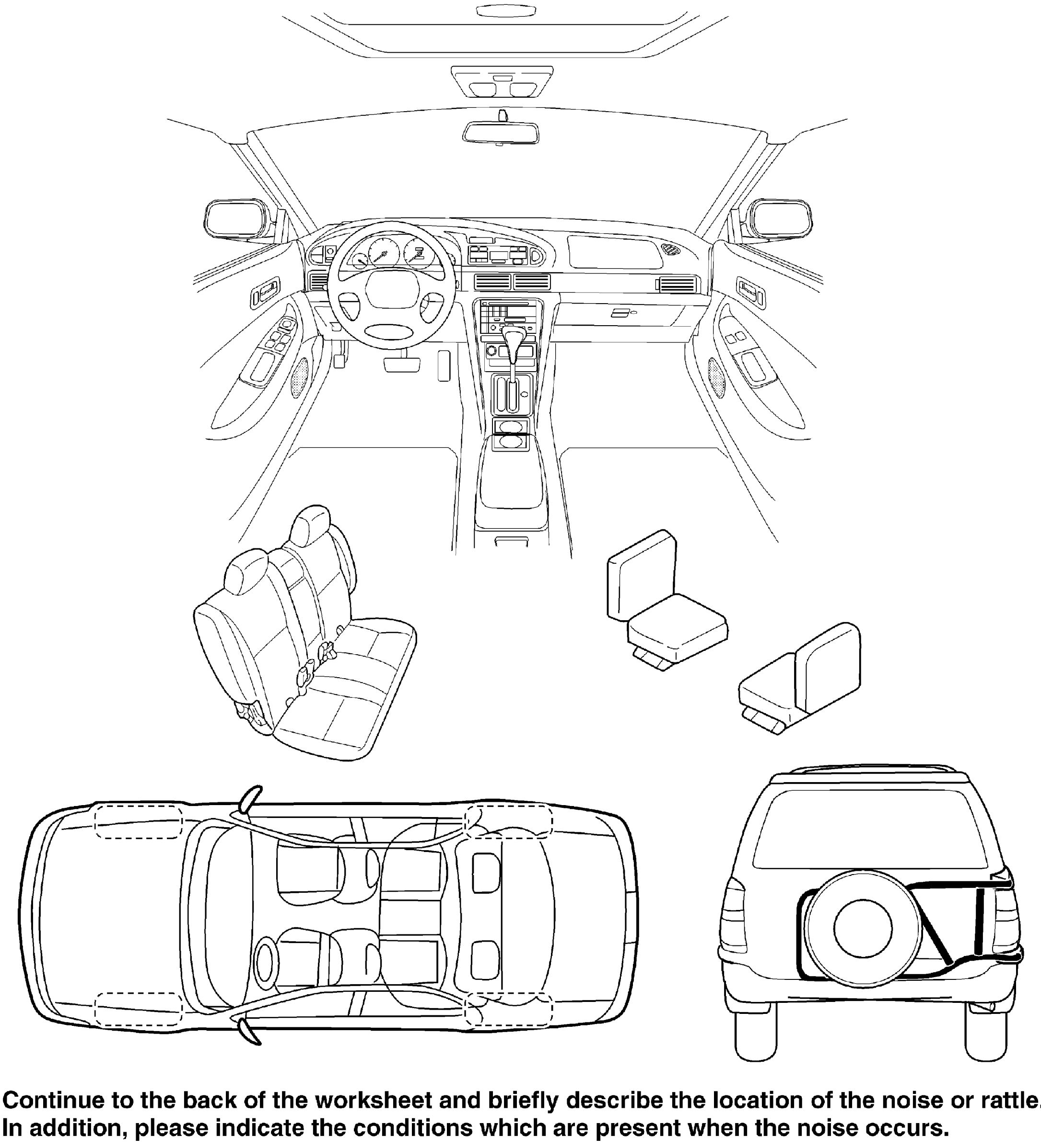

Continue to the back of the worksheet and briefly describe the location of the noise or rattle. In addition, please indicate the conditions which are present when the noise occurs.

PIIB0723E

SQUEAK & RATTLE DIAGNOSTIC WORKSHEET- page 2

Briefly describe the location where the noise occurs:

____

____

II. WHEN DOES IT OCCUR? (check the boxes that apply)

- ❏ anytime
- ❏ 1st time in the morning
- ❏ only when it is cold outside
- ❏ only when it is hot outside
- ❏ after sitting out in the sun
- ❏ when it is raining or wet
- ❏ dry or dusty conditions
- ❏ other: ____________________

III. WHEN DRIVING:

- ❏ through driveways
- ❏ over rough roads
- ❏ over speed bumps
- ❏ only at about ____ mph
- ❏ on acceleration
- ❏ coming to a stop
- ❏ on turns : left, right or either (circle)
- ❏ with passengers or cargo
- ❏ other: ______________
- ❏ after driving ____ miles or ____ minutes

IV. WHAT TYPE OF NOISE?

- ❏ squeak (like tennis shoes on a clean floor)
- ❏ creak (like walking on an old wooden floor)
- ❏ rattle (like shaking a baby rattle)
- ❏ knock (like a knock on a door)
- ❏ tick (like a clock second hand)
- ❏ thump (heavy, muffled knock noise)
- ❏ buzz (like a bumble bee)

TO BE COMPLETED BY DEALERSHIP PERSONNEL
Test Drive Notes:

____

____

	YES	NO	Initials of person performing
Vehicle test driven with customer	❏	❏	______
- Noise verified on test drive	❏	❏	
- Noise source located and repaired	❏	❏	______
- Follow up test drive performed to confirm repair	❏	❏	______

VIN: ______________ Customer Name: ____________________

W.O. #: ______________ Date: ________

This form must be attached to Work Order

SBT844

HOOD

PFP:65100

Fitting Adjustment

AIS005NB

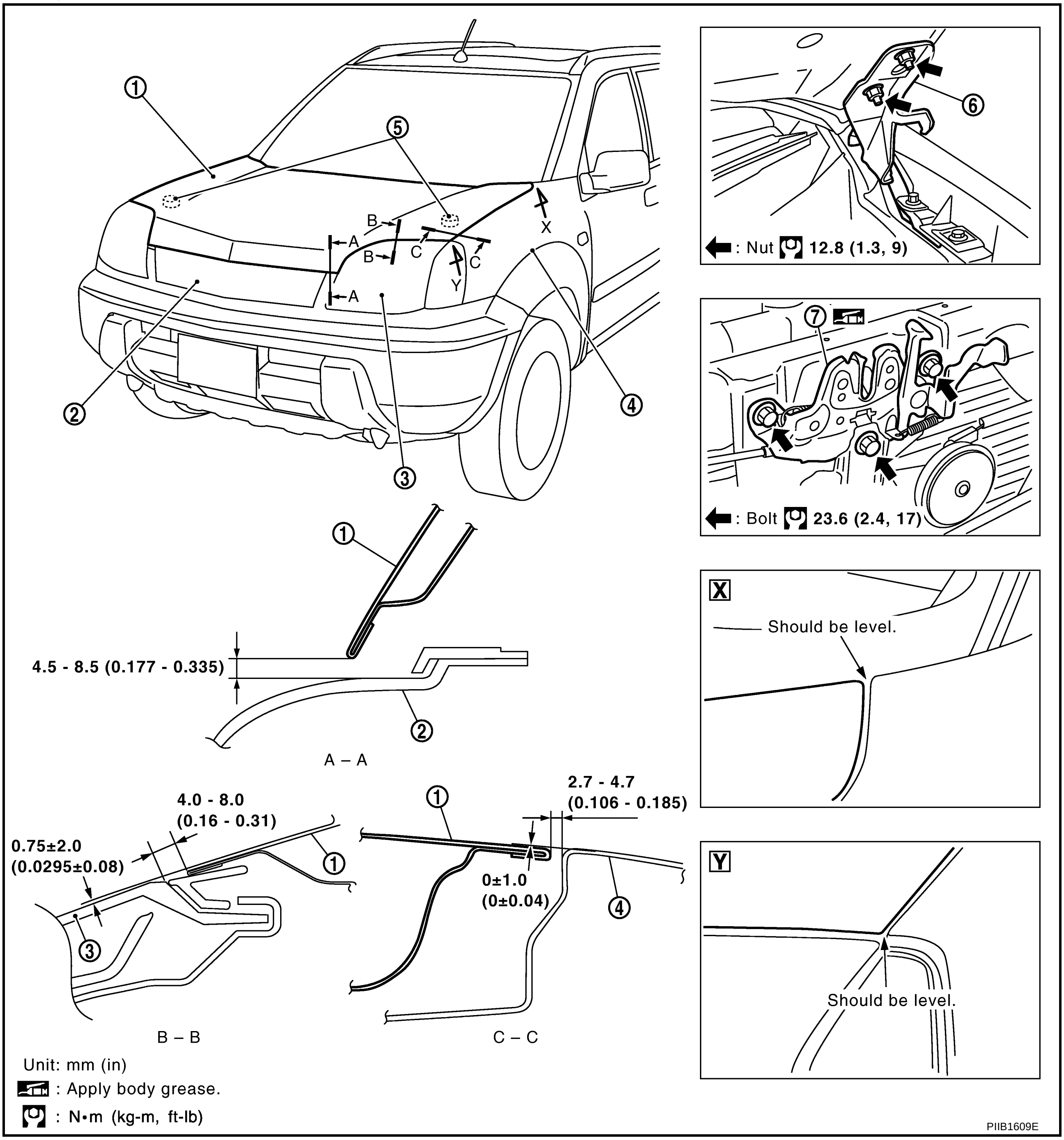

1. Hood assembly
2. Front grille
3. Headlamp
4. Front fender
5. Bumper rubber
6. Hood hinge
7. Hood lock assembly

LONGITUDINAL AND LATERAL CLEARANCE ADJUSTMENT

1. Remove hood lock assembly, loosen the hood hinge nuts and close the hood.
2. Adjust the lateral and longitudinal clearance, and open the hood to tighten the hood hinge mounting bolts to the specified torque.
3. Install the hood lock temporarily, and align the hood striker and lock so that the centers of striker and lock become vertical viewed from the front, by moving the hood lock laterally.
4. Tighten hood lock mounting bolts to the specified torque.

CAUTION:

Adjust right/left clearance between hood and each part to the following specification.

Hood and front grille (A–A)	**: Less than 1.0 mm (0.04 in)**
Hood and fender (C–C)	**: Less than 1.0 mm (0.04 in)**

FRONT END HEIGHT ADJUSTMENT

1. Remove the hood lock and adjust the height by rotating the bumper rubber until the hood becomes 1 to1.5 mm (0.04 to 0.059 in) lower than the fender.
2. Temporarily tighten the hood lock, and position it by engaging it with the hood striker. Check the lock and striker for looseness, and tighten the hood lock mounting bolts to the specified torque.

SURFACE HEIGHT ADJUSTMENT

1. Remove hood lock, and adjust the surface height difference of hood, fender and headlamp according to the fitting standard dimension, by rotating RH and LH bumper rubbers.
2. Install hood lock temporarily, and move hood lock laterally until the centers of striker and lock become vertical when viewed from the front.
3. Make sure that the hood lock secondary latch is properly engaged with the secondary striker with hood's own weight.
4. Make sure that the hood lock primary latch is securely engaged with the hood striker with hood's own weight by dropping hood from approx. 200 mm(7.87 in) height.

   CAUTION:

   Do not drop hood from a height of 300 mm (11.81 in) or more.

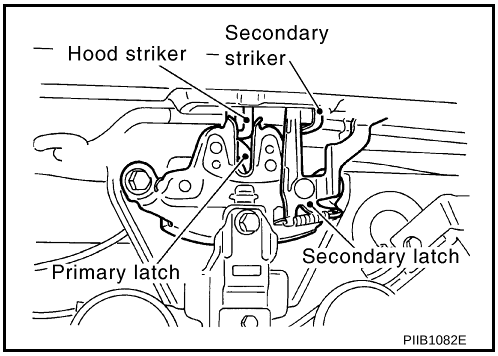

5. Move hood lockup and down until striker smoothly engages the lock when the hood is closed.
6. When pulling the hood opener lever gently, make sure that front end of the hood rises by approximately 20 mm (0.79 in) and that hood striker and hood lock primary latch is disengaged. Also make sure that hood opener returns to the original position.
7. After adjustment, tighten lock bolts to the specified torque.

Removal and Installation of Hood Assembly

AIS005NC

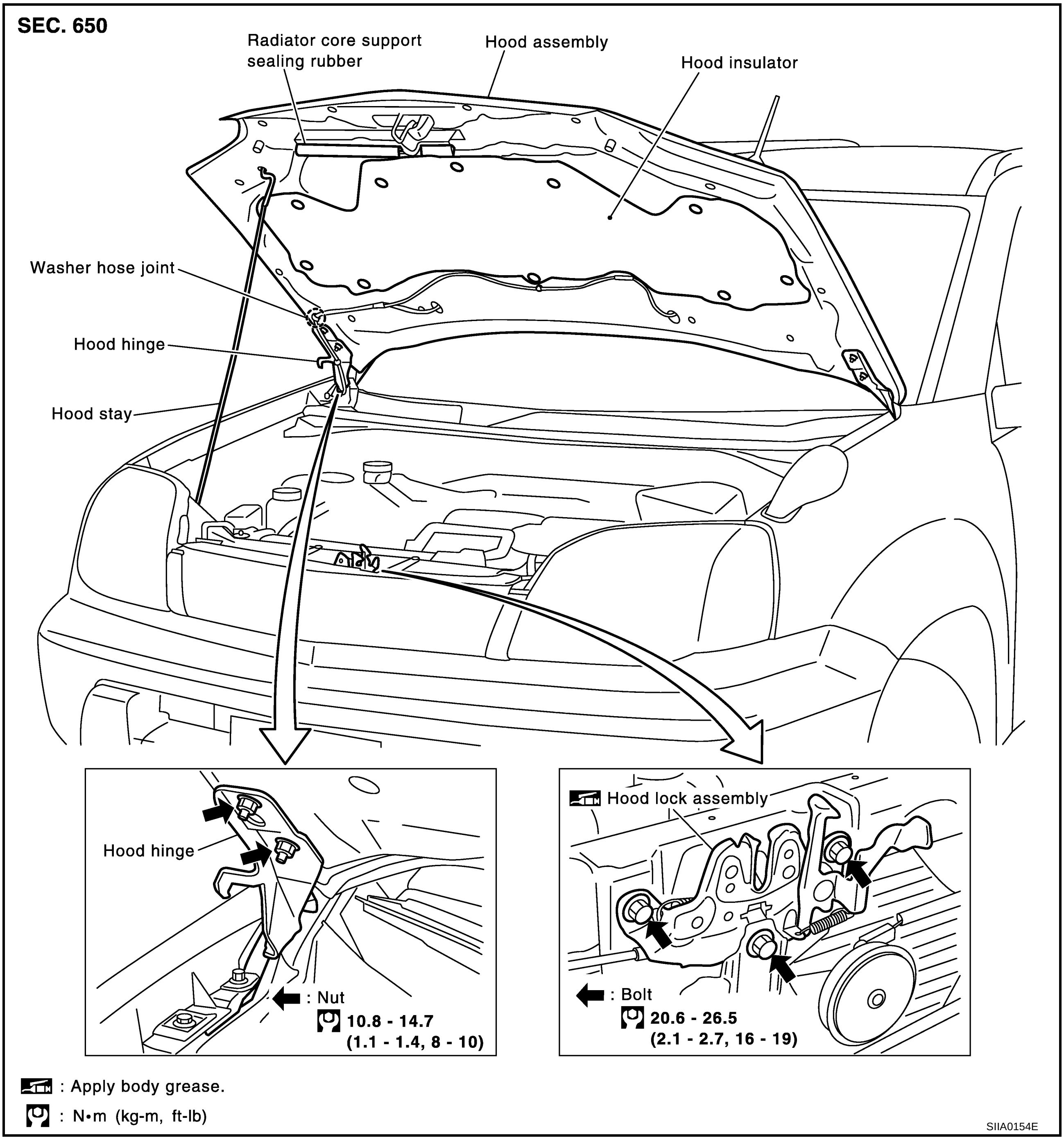

A
B
C
D
E
F
G
H
BL
J
K
L
M

REMOVAL

1. Disconnect washer hose at the connection.
2. Remove hood hinge mounting nuts on the hood and then the hood assembly.

   CAUTION:
   Operate with two workers, because of its heavy weight.

INSTALLATION

Install in the reverse order of removal.

CAUTION:

- **Before installing hood hinge, apply anticorrosive agent onto the mounting surface of the vehicle body.**
- **After installing, perform hood fitting adjustment. Refer to BL-12, "Fitting Adjustment" .**

Removal and Installation of Hood Lock Control

AIS005ND

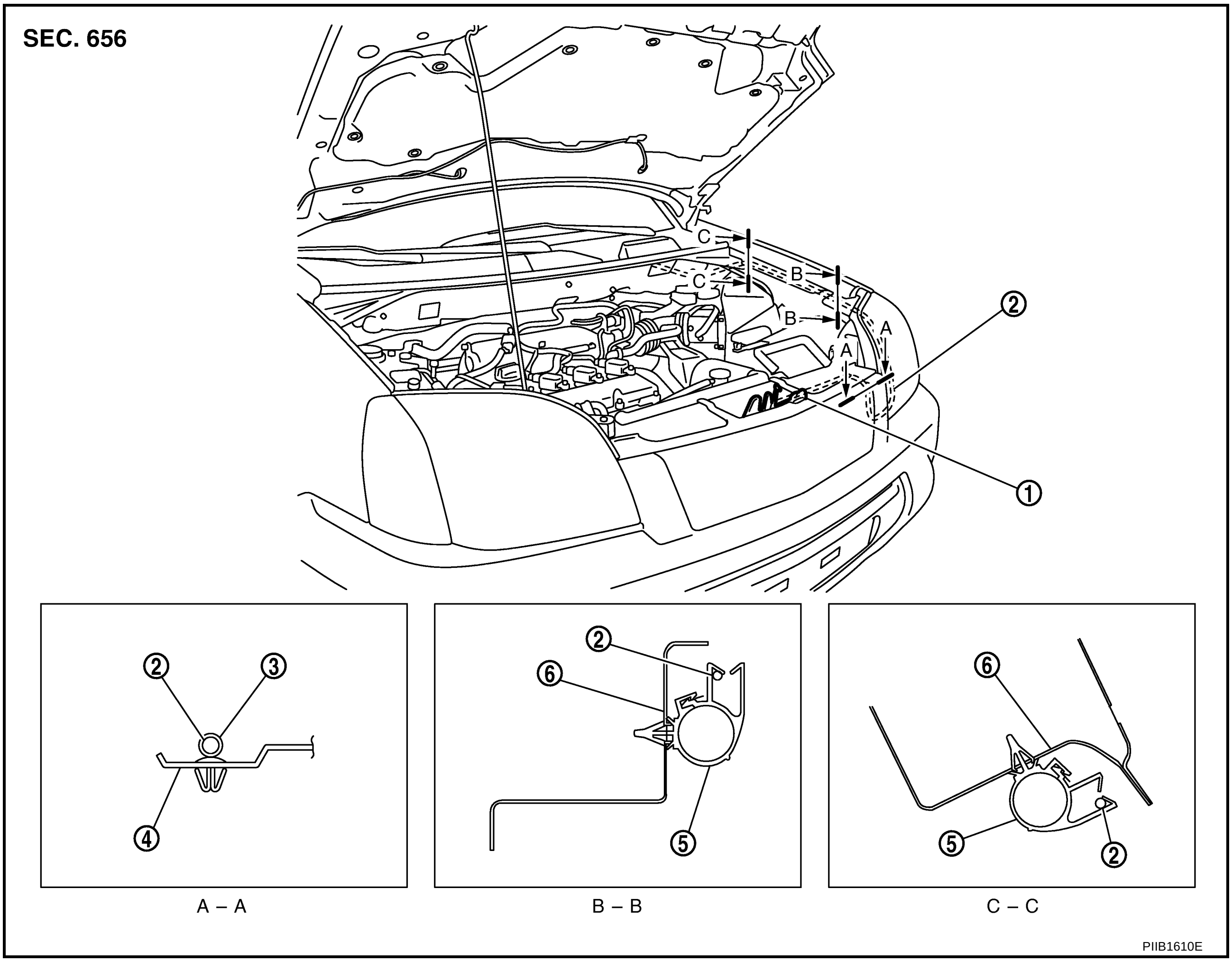

1.	Hood lock assembly	2.	Hood lock cable	3.	Cable clip
4.	Radiator core support sealing rubber	5.	Harness clip	6.	Hoodledge upper

REMOVAL

1. Remove hood lock cable from hood lock and clip of upper portion of radiator core support and hood ledge.
2. Remove fender protector. Refer to EI-20, "FENDER PROTECTOR" .
3. Remove dash side finisher. Refer to EI-36, "BODY SIDE TRIM" .
4. Remove attaching screw and then the hood opener.
5. Remove dash panel grommet and pull hood lock cable toward the passenger compartment.

   NOTE:
   When pulling the cable, be careful not to strip or scratch the outer surface.

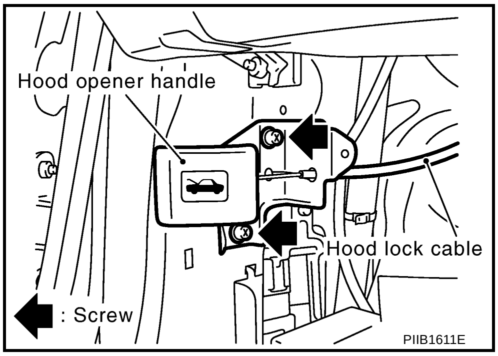

INSTALLATION

1. Pass hood lock cable through the opening while keeping the winding radius 100 mm (3.94 in) or larger.
2. After confirming that the grommet is properly positioned, push the grommet securely into the hole.
3. Apply sealant to the area on the grommet indicated with the * mark.

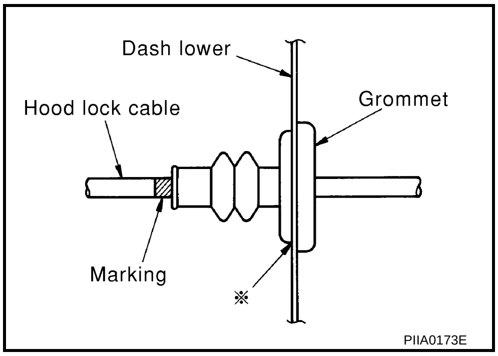

4. Connect cable securely to the lock.
5. After connection, confirm proper adjustment and operation for both hood lock and hood opener.

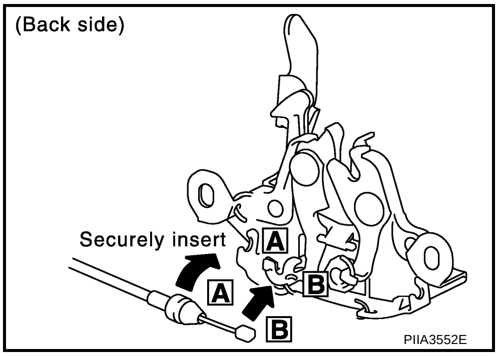

Hood Lock Control Inspection

AIS005NE

CAUTION:

If the hood lock cable is bent or deformed, replace it.

1. Make sure that the hood lock secondary latch is securely engaged with the secondary striker with hood's own weight.
2. Make sure that the hood lock primary latch is securely engaged with the hood striker with hood's own weight by dropping it from approx 200 mm (7.87 in) height.

   CAUTION:

   Do not drop hood from a height of 300 mm (11.81 in) or more.

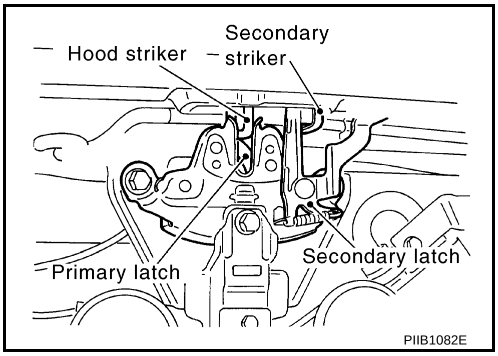

3. When pulling hood opener lever gently, make sure that front end of the hood rises by approximately 20 mm (0.79 in) and that hood striker and hood lock primary latch are disengaged. Also make sure that hood opener returns to the original position.
4. Confirm hood lock is properly lubricated. If necessary, apply “body grease” at the point shown in the figure.

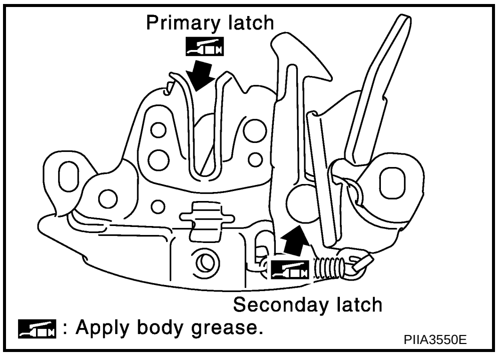

A B C D E F G H BL J K L M

FRONT FENDER

PFP:63100

Removal and Installation

AIS0061L

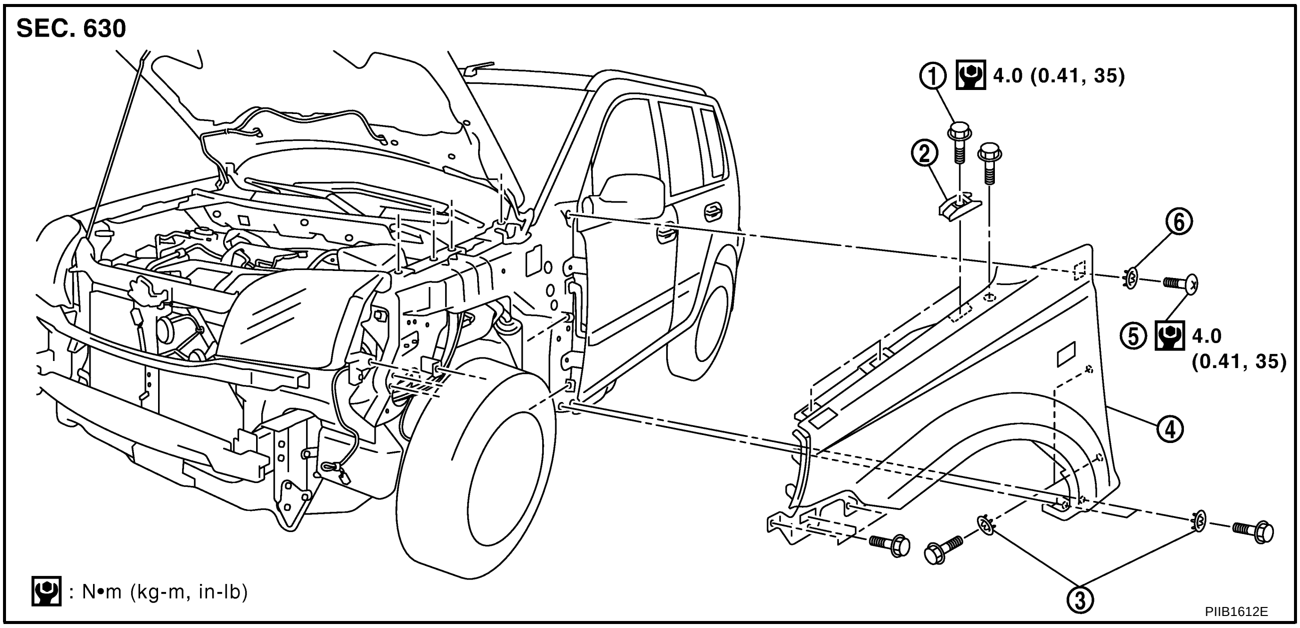

1.	Bolt	2.	Stiffener	3.	Spring washer
4.	Front fender	5.	TORX bolt (T20)	6.	Spring washer

REMOVAL

1. Remove the front bumper. Refer to EI-14, "FRONT BUMPER" .
2. Remove the turn signal lamp. Refer to LT-29, "Removal and Installation of Front Turn Signal Lamp" .
3. Remove the front fender protector. Refer to EI-20, "FENDER PROTECTOR" .
4. Remove the mounting bolt and remove the front fender.

CAUTION:

While removing use a shop cloth to protect body from damaging.

INSTALLATION

Install in the reverse order of removal.

CAUTION:

- **After installing, apply touch-up paint (the body color) onto the head of the front fender mounting bolts.**
- **After installing, check front fender adjustment. Refer to BL-12, "Fitting Adjustment" and BL-19, "Fitting Adjustment" .**

DOOR

PFP:80100

Fitting Adjustment

AIS005NF

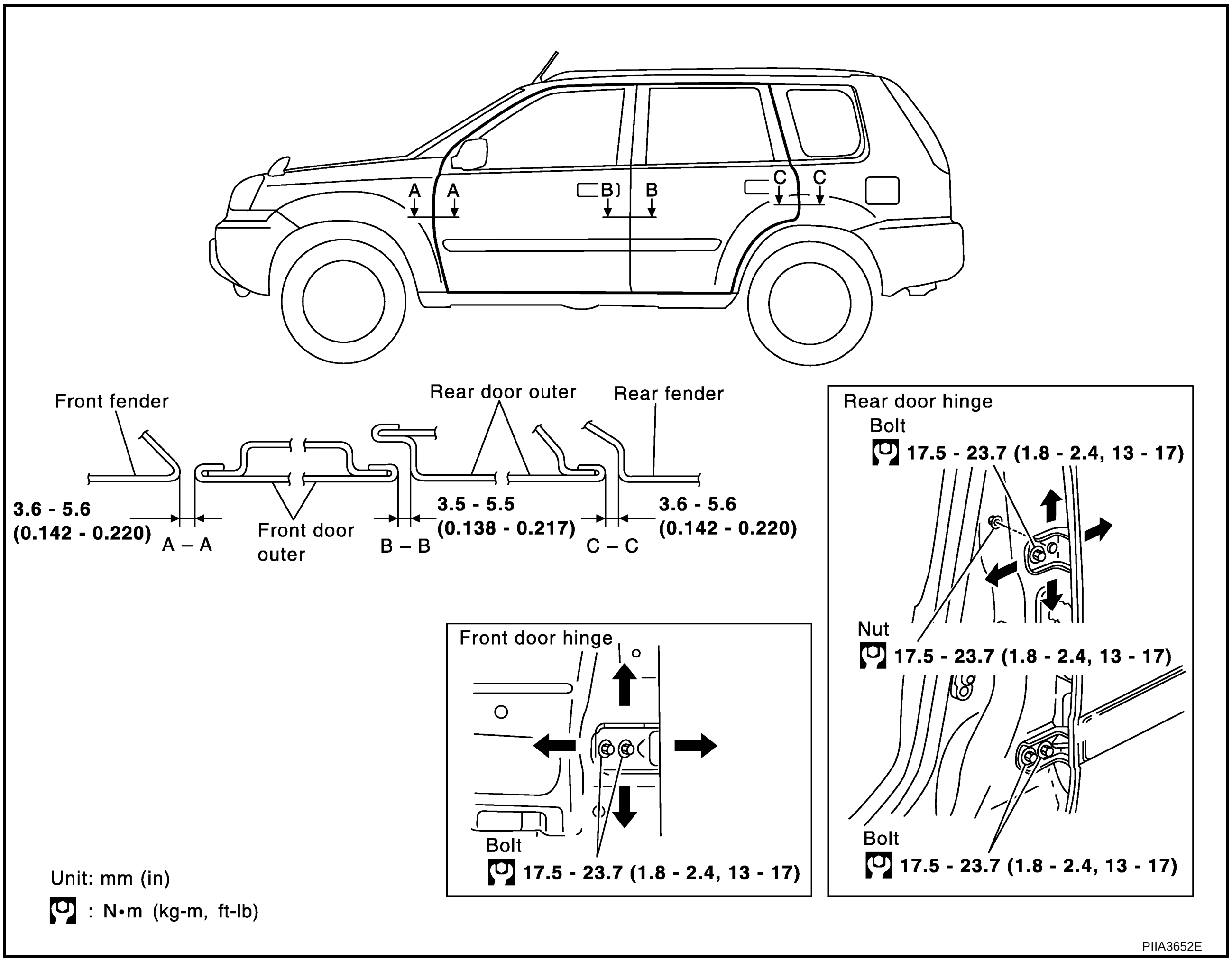

FRONT DOOR

Longitudinal Clearance and Surface Height Adjustment at Front End

1. Remove fender protector. Refer to EI-20, "FENDER PROTECTOR" .
2. Working from the inside the fender, loosen hinge mount bolts on the body. Lift rear end of the front door to adjust clearance and surface difference properly.

REAR DOOR

Longitudinal Clearance and Surface Height Adjustment at Front End

1. Remove upper and lower garnishes on the center pillar. Refer to EI-36, "BODY SIDE TRIM" .
2. Loosen mounting bolts from outside of vehicle, mounting nuts from inside of vehicle. Open rear door. Raise rear end of it to adjust.

STRIKER ADJUSTMENT

Adjust striker until it is parallel to the lock engagement direction.

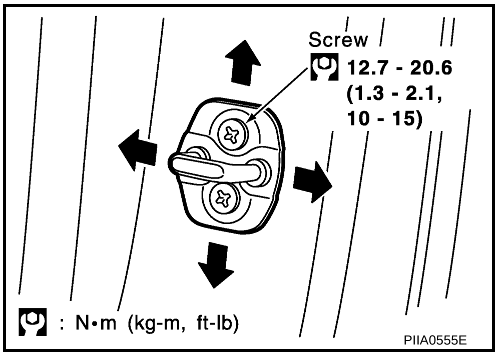

Removal and Installation of Front Door

AIS005NG

CAUTION:

- **When removing and installing the front door assembly, support the door with a jack and cloth to protect the door and body.**
- **When removing and installing front door assembly, be sure to carry out the fitting adjustment. Refer to BL-19, "Fitting Adjustment" .**
- **Operate with two workers, because of its heavy weight.**
- **After installing, apply touch-up paint (the body color) onto the head of the hinge mounting nuts.**
- **Check the hinge rotating part for poor lubrication. If necessary, apply "body grease".**
- **Check front door open/close operation after installation.**

REMOVAL

1. Grommet is pulled out, and the front door harness connector is detached.

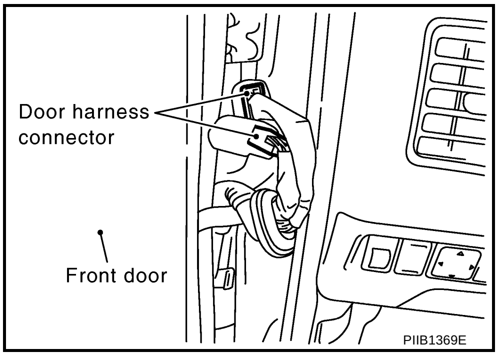

2. Remove the mounting bolts of the check link on the vehicle.

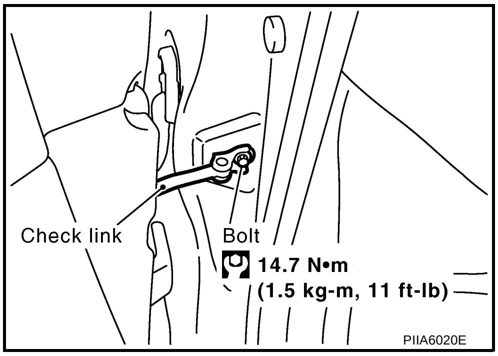

3. Remove the door-side hinge mounting nuts, and remove the door assembly.

   : 20.6 N·m (2.1 kg-m, 15 ft-lb)

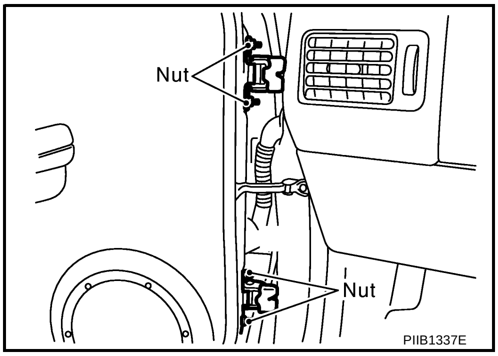

INSTALLATION

Install in the reverse order of removal.

Removal and Installation of Rear Door

AIS005NH

CAUTION:

- **When removing and installing the rear door assembly, support the door with a jack and cloth to protect the door and body.**
- **When removing and installing rear door assembly, be sure to carry out the fitting adjustment. Refer toBL-19, "Fitting Adjustment" .**
- **Check the hinge rotating part for poor lubrication. If necessary, apply "body grease".**

- **After installing, apply touch-up paint (the body color) onto the head of the hinge mounting nuts.**
- **Operate with two workers, because of its heavy weight.**
- **Check rear door open/close operation after installation.**

REMOVAL

1. Grommet is pulled out, and the rear door harness connector is detached.

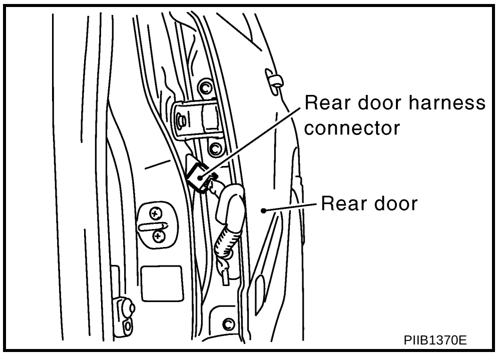

2. Remove the mounting bolts of the check link on the vehicle.

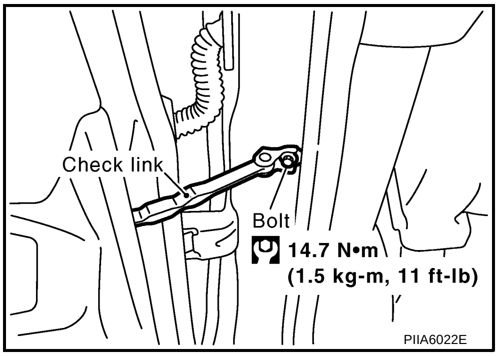

3. Remove the door-side hinge mounting nuts, and remove the door assembly.

   : 20.6 N·m (2.1 kg-m, 15 ft-lb)

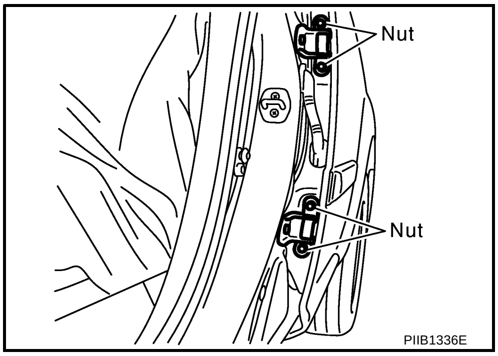

INSTALLATION

Install in the reverse order of removal.

Door Weatherstrip

AIS005NI

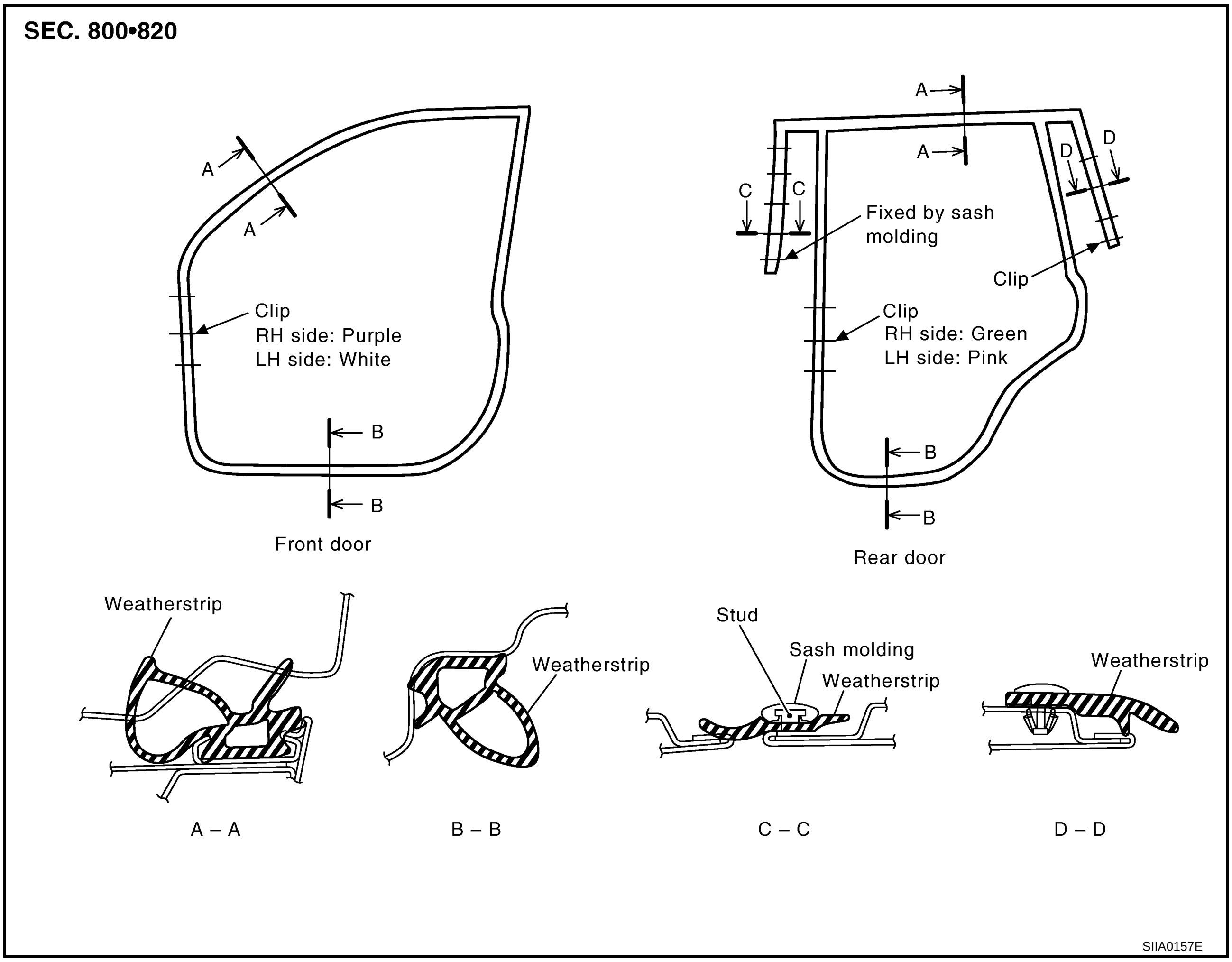

REMOVAL

1. Remove the mounting bolts of the check link on the vehicle. Refer to BL-20, "Removal and Installation of Front Door" or BL-20, "Removal and Installation of Rear Door" .
2. Remove the weatherstrip clips and remove weatherstrip.

CAUTION:

After removal, do not pull strongly on the weatherstrip.

INSTALLATION

Install in the reverse order of removal.

POWER DOOR LOCK SYSTEM

PFP:24814

Component Parts and Harness Connector Location

AIS005X9

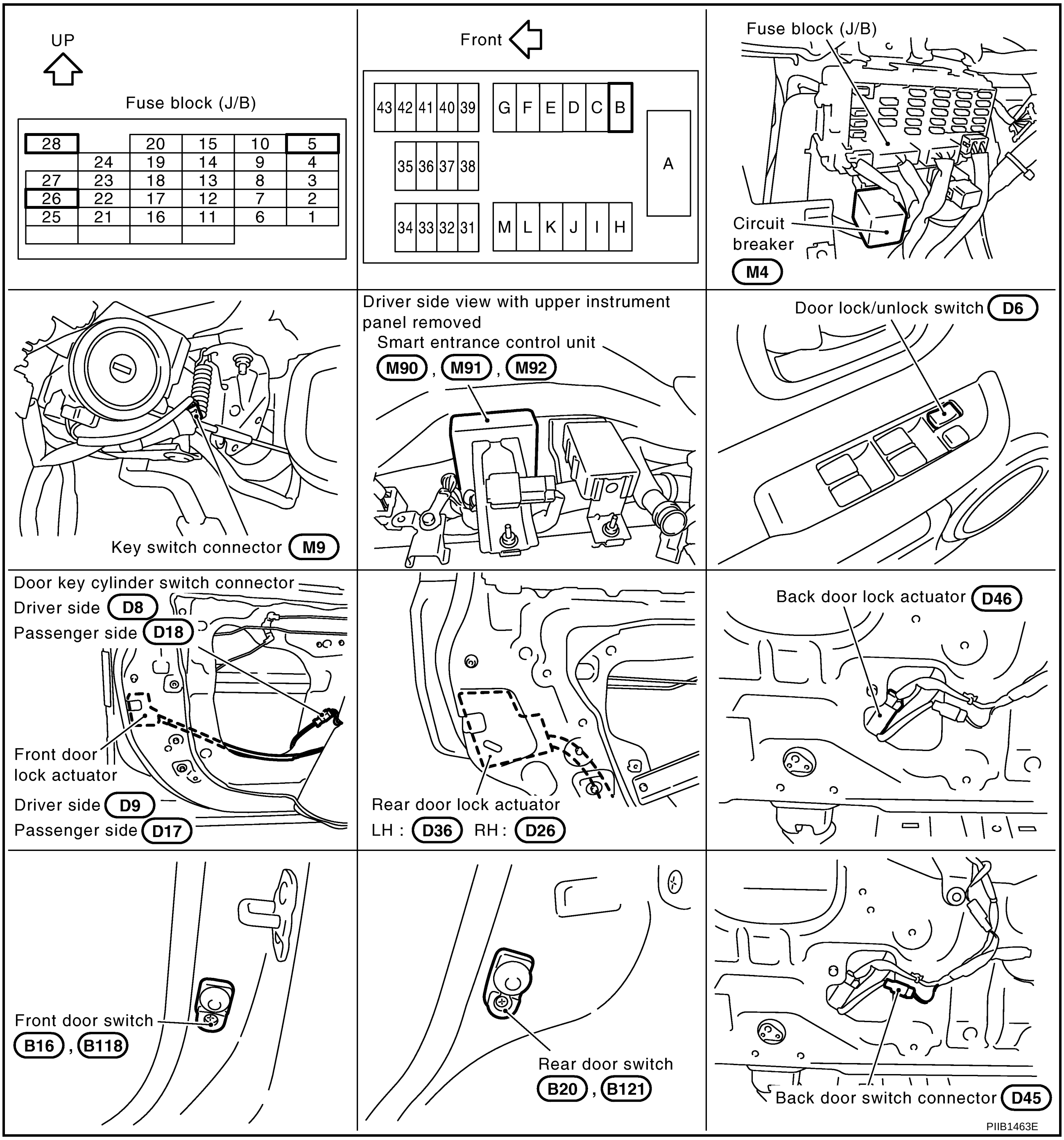

PIIB1463E

System Description

AIS005XA

OPERATION

Power is supplied at all times

- through 10A fuse [No. 26, located in the fuse block (J/B)]
- to smart entrance control unit terminal 49,
- through 40A fusible link (letter **B** , located in the fusible link and fuse box)
- to smart entrance control unit terminal 51.

Ground is supplied at all times

- to smart entrance control unit terminal 43 and 64
- through grounds M27 and M70.

When ignition switch is in ON or START position, power is supplied

- through 10A fuse [No. 5, located in the fuse block (J/B)]
- to smart entrance control unit terminal 27.

When key switch is in INSERTED position, power is supplied

- through 10A fuse [No. 28, located in the fuse block (J/B)]
- through key switch terminal 1
- through key switch terminal 2 and
- to smart entrance control unit terminal 25.

DOOR LOCK/UNLOCK SWITCH (POWER WINDOW MAIN SWITCH) OPERATION

When power window main switch (door lock/unlock switch) is in LOCK position, ground is supplied

- to smart entrance control unit terminal 5
- through power window main switch (door lock/unlock switch) terminal 17
- through power window main switch (door lock/unlock switch) terminal 19 and
- through grounds M27 and M70.

Then all doors are locked.
When power window main switch (door lock/unlock switch) is in UNLOCK position, ground is supplied

- to smart entrance control unit terminal 4
- through power window main switch (door lock/unlock switch) terminal 18
- through power window main switch (door lock/unlock switch) terminal 19 and
- through grounds M27 and M70.

Then all doors are unlocked.

DOOR LOCK/UNLOCK SWITCH (PASSENGER SIDE) OPERATION

When door lock/unlock switch (passenger side) is in LOCK position, ground is supplied

- to smart entrance control unit terminal 5
- through door lock/unlock switch (passenger side) terminal 2
- through door lock/unlock switch (passenger side) terminal 3 and
- through grounds M27 and M70.

Then all doors are locked.
When door lock/unlock switch (passenger side) is in UNLOCK position, ground is supplied

- to smart entrance control unit terminal 4
- through door lock/unlock switch (passenger side) terminal 1
- through door lock/unlock switch (passenger side) terminal 3 and
- through grounds M27 and M70.

Then all doors are unlocked.

DOOR KEY CYLINDER SWITCH OPERATION

Driver Side

When door key cylinder switch (driver side) is in LOCK position, ground is supplied

- to smart entrance control unit terminal 11
- through door key cylinder switch (driver side) terminal 1
- through door key cylinder switch (driver side) terminal 2 and
- through grounds M27 and M70.

Then all doors are locked.
When door key cylinder switch (driver side) is in UNLOCK position, ground is supplied

- to smart entrance control unit terminal 10
- through door key cylinder switch (driver side) terminal 3
- through door key cylinder switch (driver side) terminal 2 and
- through grounds M27 and M70.

Then all doors are unlocked.

Passenger Side

When door key cylinder switch (passenger side) is in LOCK position, ground is supplied

- to smart entrance control unit terminal 11
- through door key cylinder switch (passenger side) terminal 3
- through door key cylinder switch (passenger side) terminal 2 and
- through grounds M27 and M70.

Then all doors are locked.
When door key cylinder switch (passenger side) is in UNLOCK position, ground is supplied

- to smart entrance control unit terminal 10
- through door key cylinder switch (passenger side) terminal 1
- through door key cylinder switch (passenger side) terminal 2 and
- through grounds M27 and M70.

Then all doors are unlocked.

KEY REMINDER SYSTEM

- If the ignition key is in the ignition key cylinder and doors are open, setting lock/unlock switch, lock knob, key or multi-remote controller to “LOCK” locks the door once but then immediately unlocks all doors.

Schematic

AIS005XB

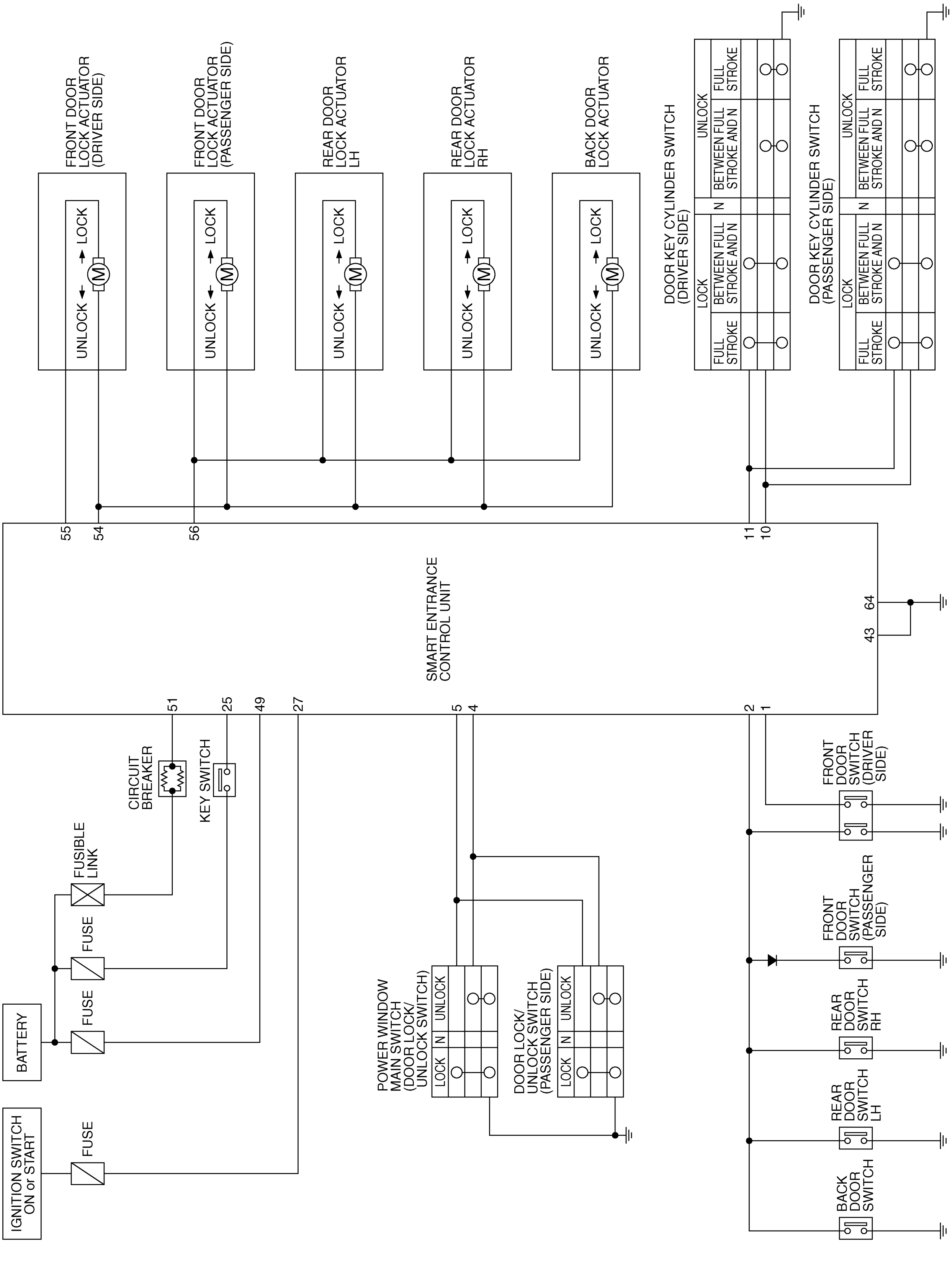

TIWB0043E

Wiring Diagram — D/LOCK —

AIS005XC

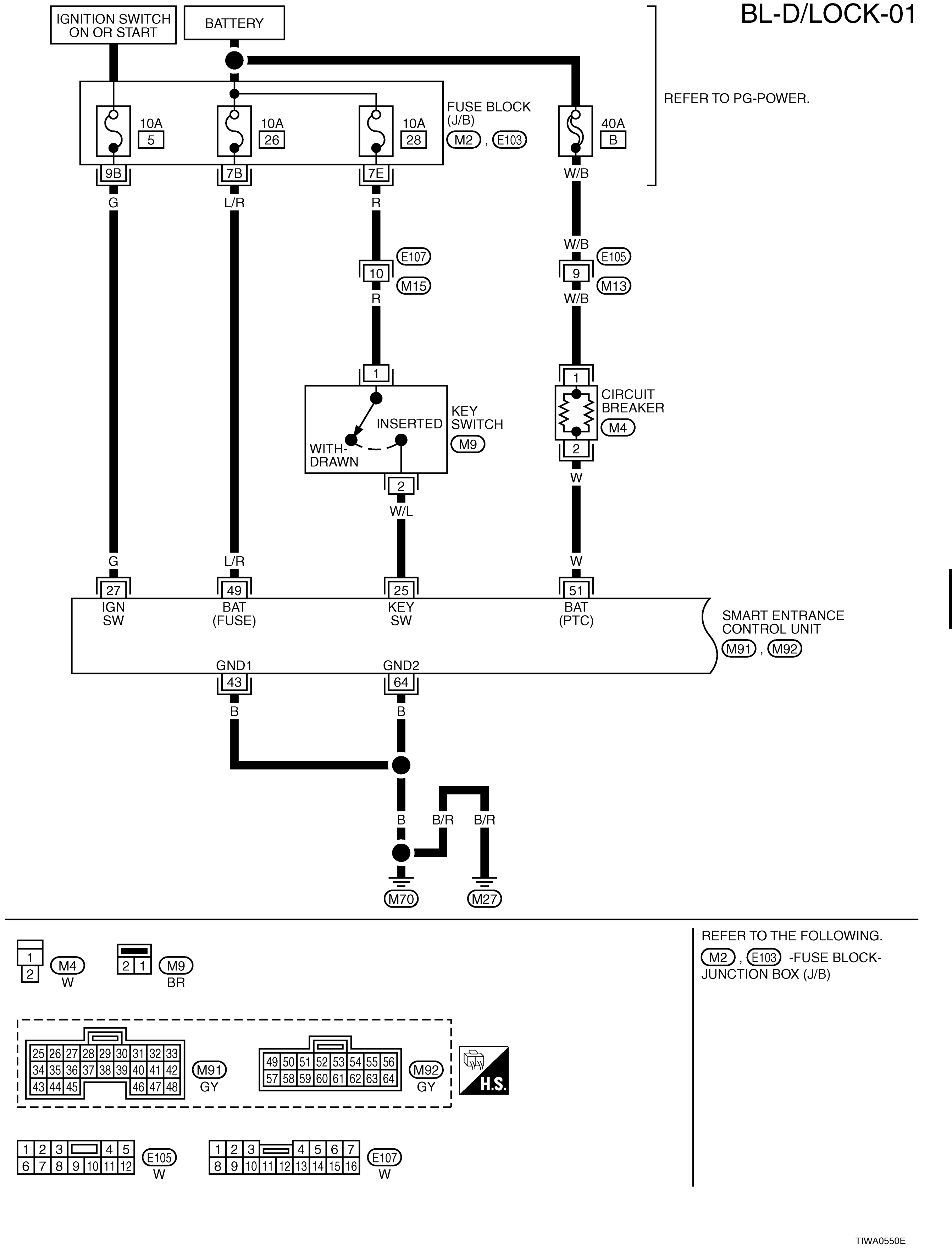

A B C D E F G H BL J K L M

BL-D/LOCK-02

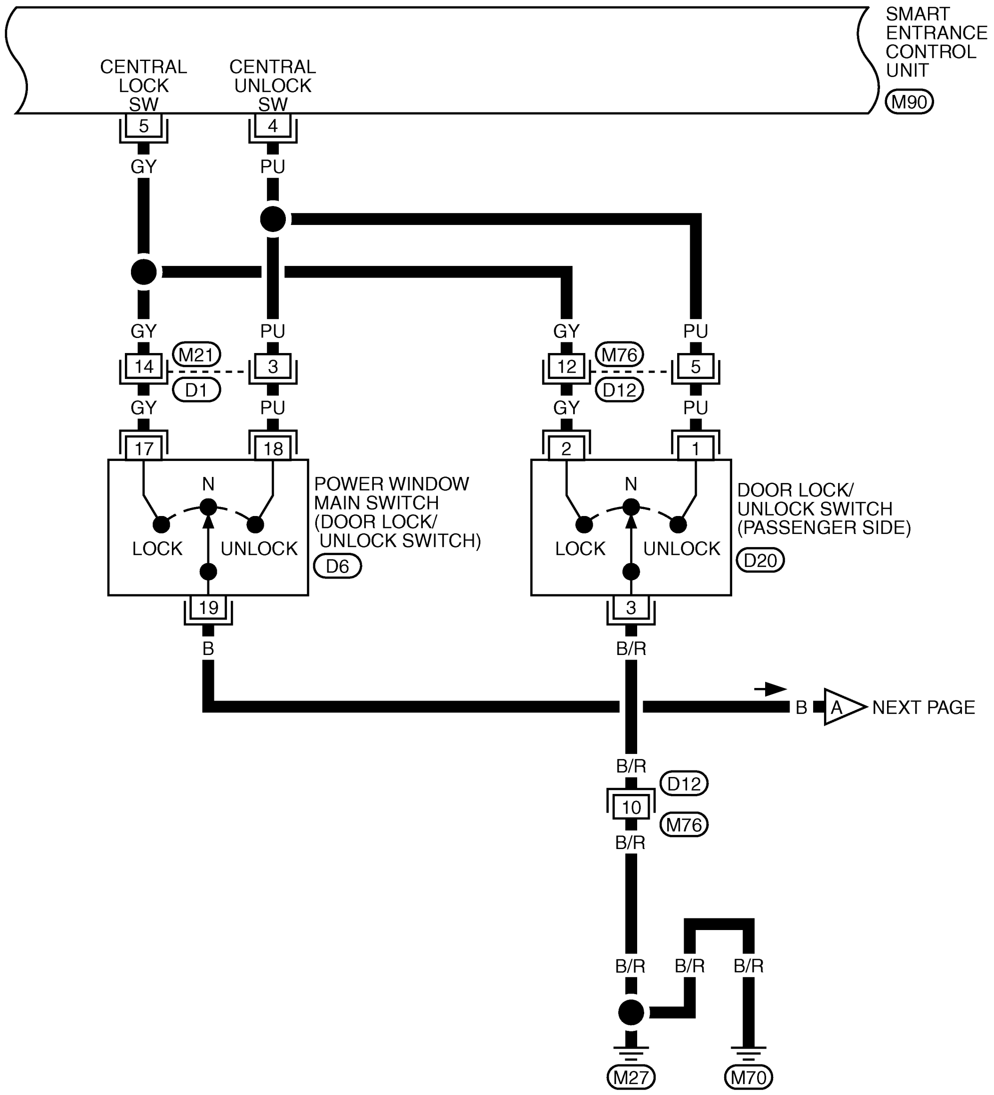

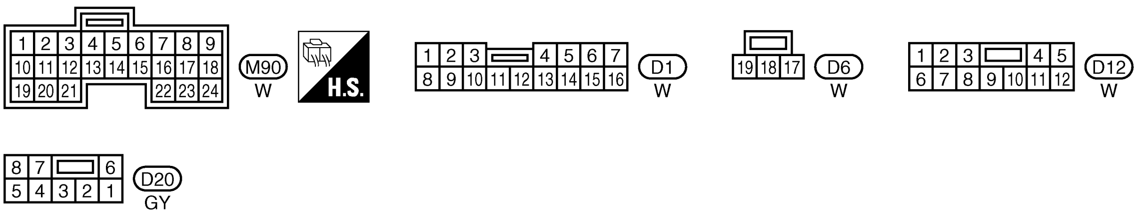

TIWB0044E

BL-D/LOCK-03

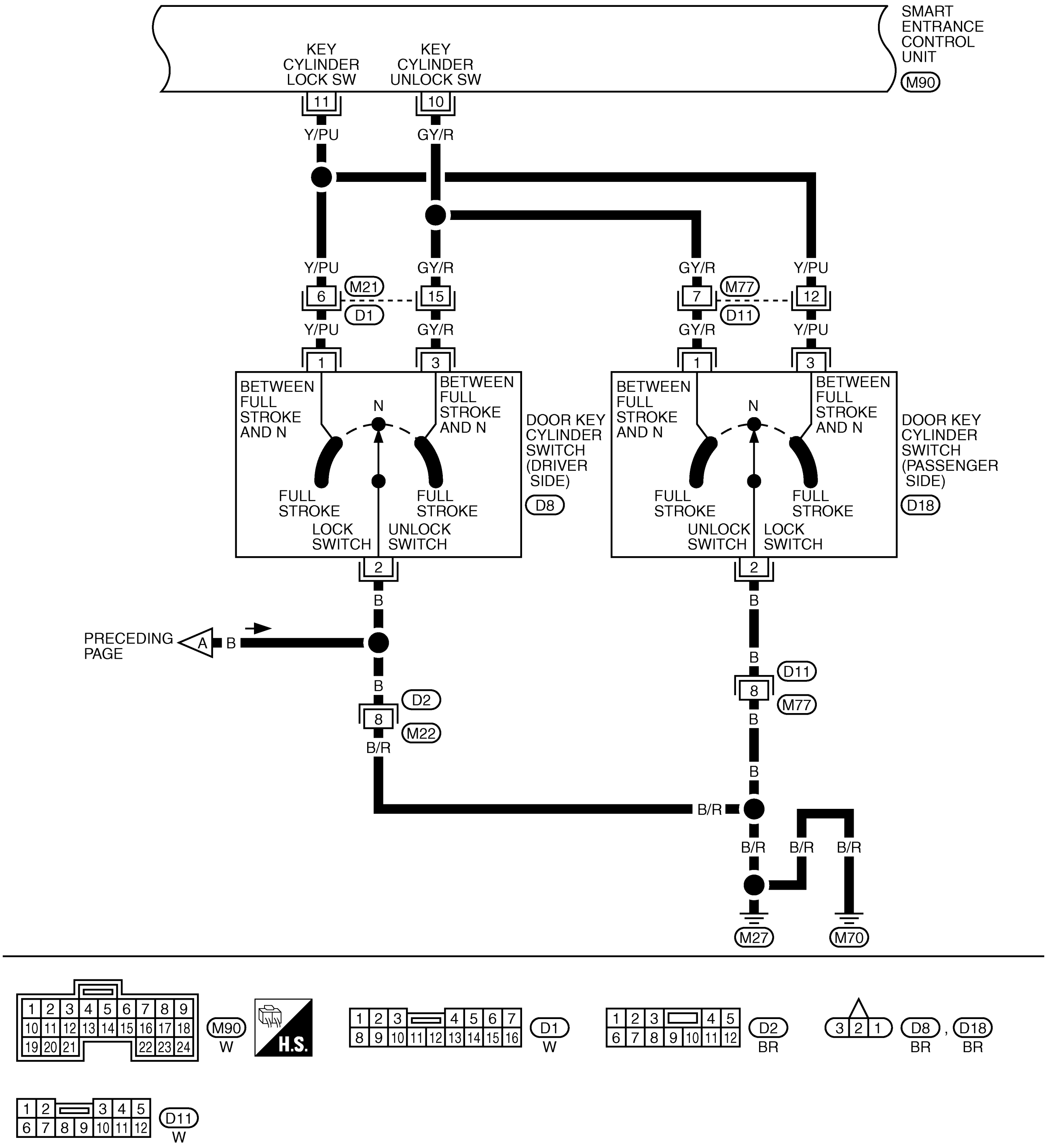

TIWB0045E

BL-D/LOCK-04

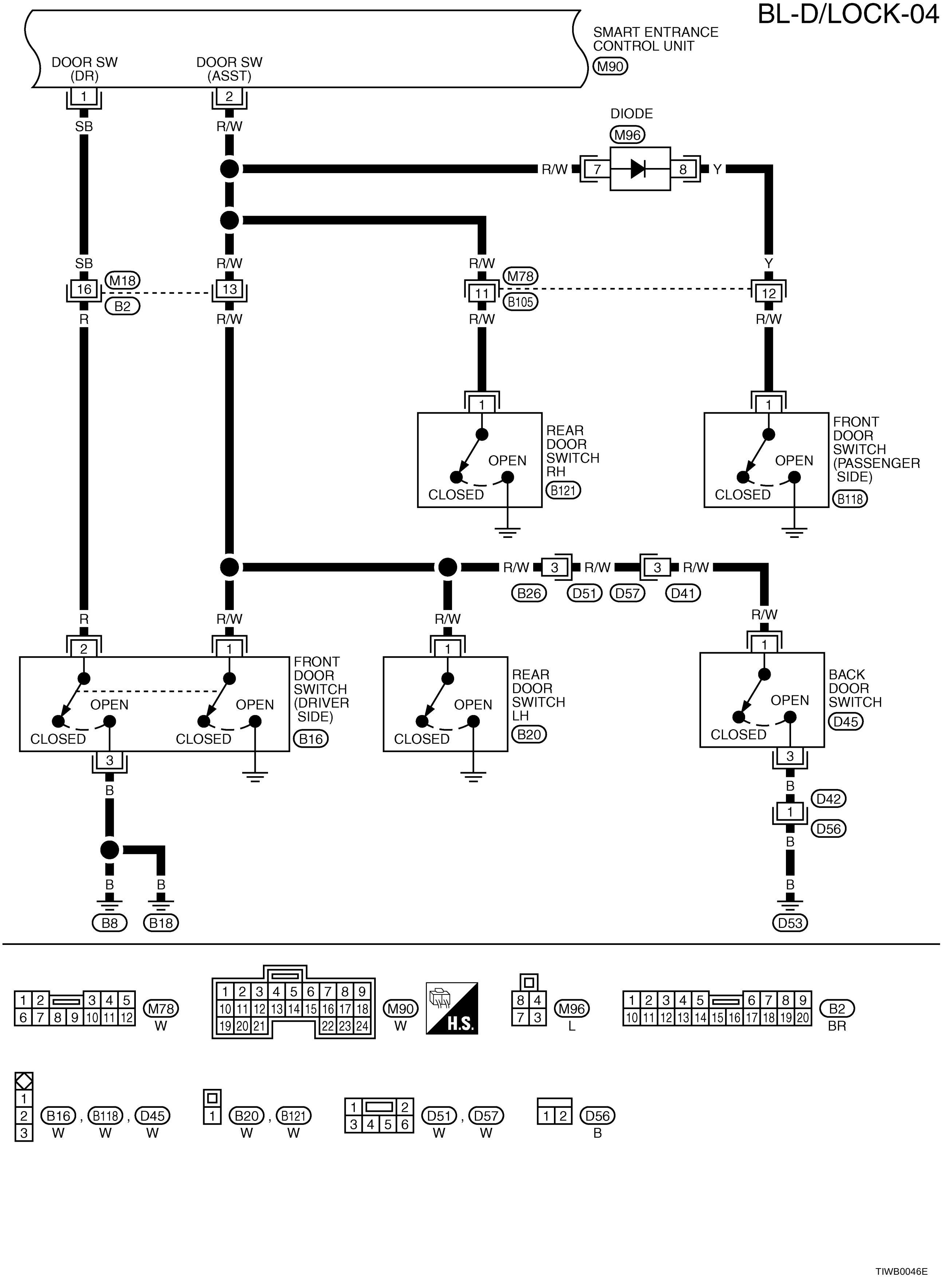
SMART ENTRANCE CONTROL UNIT
M90
DOOR SW (DR)
DOOR SW (ASST)
DIODE
M96
M18
B2
M78
B105
REAR DOOR SWITCH RH
B121
FRONT DOOR SWITCH (PASSENGER SIDE)
B118
OPEN
CLOSED
B26
D51
D57
D41
FRONT DOOR SWITCH (DRIVER SIDE)
B16
REAR DOOR SWITCH LH
B20
BACK DOOR SWITCH
D45
D42
D56
B8
B18
D53
H.S.
TIWB0046E

BL-D/LOCK-05

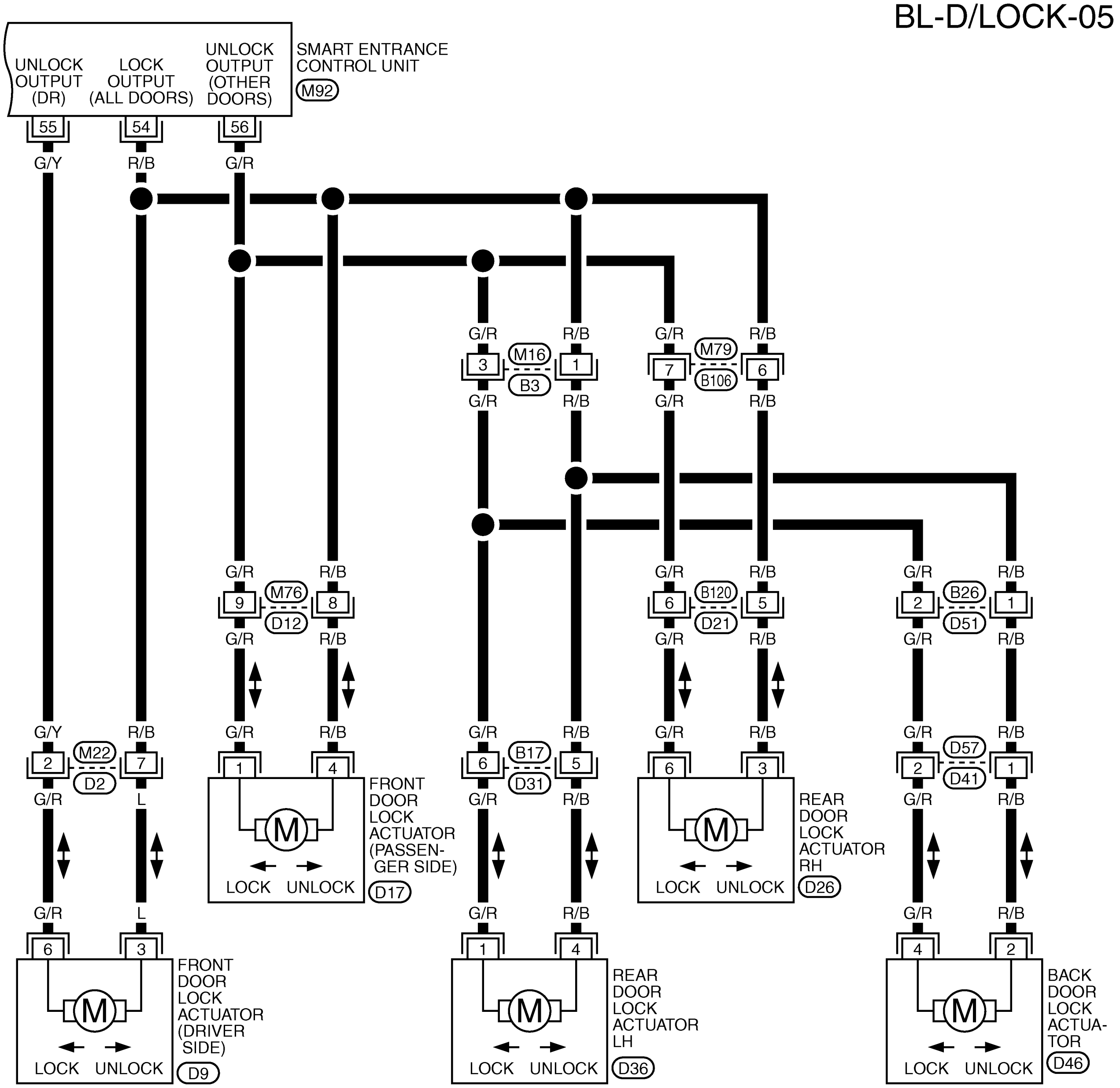

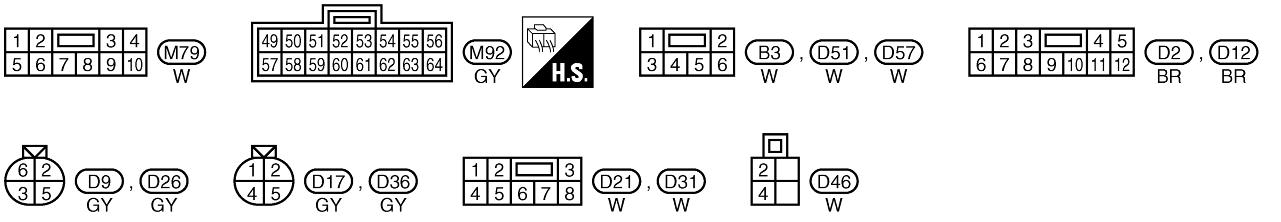

TIWB0047E

Terminal and Reference Value for Smart Entrance Control Unit

AIS005XD

Terminal	Wire color	Item	Condition	Voltage [V] (Approx.)
1	SB	Driver door switch	Door open (ON) → close (OFF)	0 → 5
2	R/W	All door switch	Door open (ON) → close (OFF)	0 → 5
4	PU	Power door lock switch unlock signal	Unlock operation (ON)	0
			Other than above (OFF)	5
5	GY	Power door lock switch lock signal	Lock operation (ON)	0
			Other than above (OFF)	5
10	GY/R	Door key cylinder unlock switch	OFF (Neutral) → ON (Unlocked)	5 → 0
11	Y/PU	Door key cylinder lock switch	OFF (Neutral) → ON (Locked)	5 → 0
25	W/L	Key switch	Key inserted (ON) → key removed from IGN key cylinder (OFF)	Battery voltage → 0
27	G	Ignition switch (ON)	Ignition switch is in ON or START position	Battery voltage
43	B	Ground	—	0
49	L/R	Power source (Fuse)	—	Battery voltage
51	W	Power source (PTC)	—	Battery voltage
54	R/B	All door lock actuator lock	Power door lock switch Lock operation	0 → Battery voltage → 0
55	G/Y	All door lock actuator unlock	Power door lock switch Unlock operation	0 → Battery voltage → 0
56	G/R	Passenger door and rear door (LH/RH) lock actuator unlock	Power door lock switch Unlock operation	0 → Battery voltage → 0
64	B	Ground	—	0

Symptom Chart

AIS005XE

A B C D E F G H BL J K L M

Symptom	Diagnosis/service procedure	Reference page
Power door lock does not operate using any switch.	1. Smart entrance control unit power supply and ground circuit check	BL-33
	2. Front door lock actuator check (Driver side)	BL-38
	3. Front door lock actuator check (Passenger side)	BL-39
	4. Rear door lock actuator check LH	BL-40
	5. Rear door lock actuator check RH	BL-40
	6. Back door lock actuator check	BL-41
	7. Replace smart entrance control unit.	—
Power door lock does not operate with power window main switch (lock/unlock switch).	1.power window main switch (door lock/unlock switch) check	BL-34
	2. Replace smart entrance control unit.	—
Power door lock does not operate with door lock/unlock switch (passenger side).	1. Door lock/unlock switch (passenger side) check	BL-35
	2. Replace smart entrance control unit.	—
Power door lock does not operate with door key cylinder (driver side) switch.	1. Door key cylinder switch (driver side) check	BL-36
	2. Replace smart entrance control unit.	—
Power door lock does not operate with door key cylinder (passenger side) switch.	1. Door key cylinder switch (passenger side) check	BL-37
	2. Replace smart entrance control unit.	—
Specific door lock actuator does not operate.	1. Front door lock actuator check (Driver side)	BL-38
	2. Front door lock actuator check (Passenger side)	BL-39
	3. Rear door lock actuator LH	BL-40
	4. Rear door lock actuator RH	BL-40
	5. Back door lock actuator	BL-41
Key reminder system does not operate. (All of other functions are OK.)	1. Front door switch (Driver side) check	BL-42
	2. All door switch check	BL-42
	3. Key switch check	BL-44
	4. Replace smart entrance control unit.	—

Smart Entrance Control Unit Power Supply and Ground Circuit Check

AIS005XF

1. CHECK FUSE AND FUSIBLE LINK

- Check 10A fuse [No. 26, located in the fuse block (J/B)].
- Check 40A fusible link (letter B, located in the fusible link and fuse box).

OK or NG

OK >> GO TO 2.
NG >> If fuse is blown out, be sure to eliminate cause of malfunction before installing new fuse. Refer to PG-2, "POWER SUPPLY ROUTING" .

2. CHECK POWER SUPPLY CIRCUIT

1. Turn ignition switch OFF.
2. Disconnect smart entrance control unit connector.
3. Check voltage between smart entrance control unit harness connector M92 terminal 49, 51 and ground.

49 (L/R) – Ground : Battery voltage
51 (W) – Ground : Battery voltage

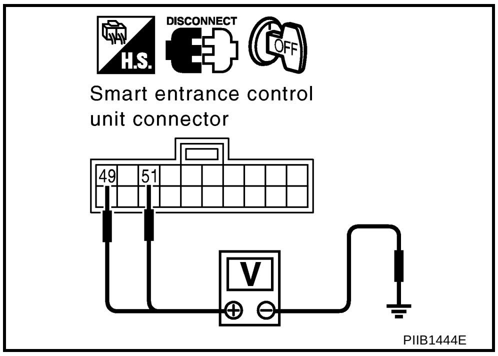

OK or NG

OK >> GO TO 3.
NG >> Check smart entrance control unit power supply circuit for open.

3. CHECK GROUND CIRCUIT

Check continuity between smart entrance control unit harness connector M91, M92 terminal 43, 64 and ground.

43 (B) – ground : Continuity should exit.
64 (B) – ground : Continuity should exit.

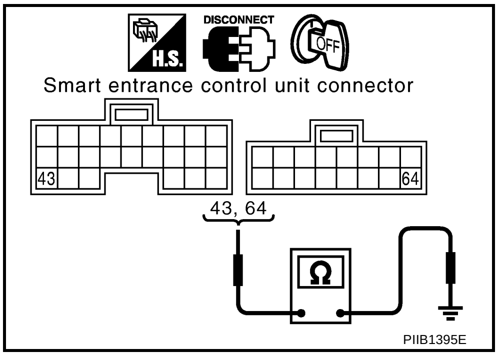

OK or NG

OK >> Power supply and ground circuit is OK.
NG >> Repair or replace harness.

Power Window Main Switch (Door Lock/Unlock Switch) Check

AIS005XG

1. CHECK DOOR LOCK/UNLOCK SWITCH SIGNAL

Check continuity between smart entrance control unit harness connector and ground.

Connector	Terminals (Wire color)		Condition of power window main switch (door lock/unlock switch)	Voltage (V) (Approx.)
	(+)	(-)		
M90	4 (PU)	Ground	Unlock	0
			Neutral / Lock	5
	5 (GY)		Lock	0
			Neutral / Unlock	5

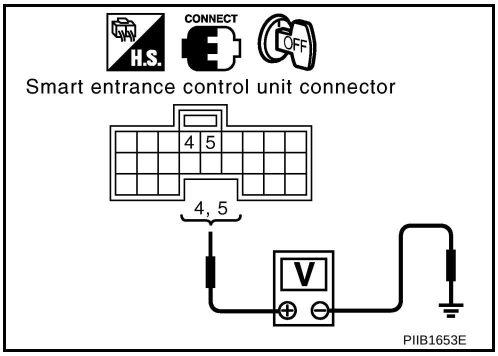

OK or NG

OK >> Power window main switch (door lock/unlock switch) circuit is OK.
NG >> GO TO 2.

2. CHECK DOOR LOCK/UNLOCK SWITCH

1. Turn ignition switch OFF.
2. Disconnect power window main switch (door lock/unlock switch) connector.
3. Check continuity between power window main switch (door lock/unlock switch) terminals 17, 18 and 19.

Terminals		Condition of power window main switch (door lock/unlock switch)	Continuity
17	19	Lock	Yes
		Neutral / Unlock	No
18		Unlock	Yes
		Neutral / Lock	No

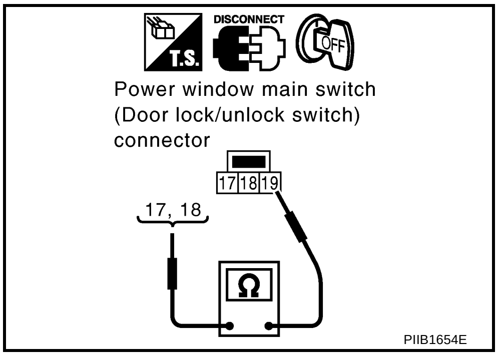

OK or NG

OK >> Check the following.
- Ground circuit for power window main switch (door lock/unlock switch)
- Harness for open or short between power window main switch (door lock/unlock switch) and smart entrance control unit connector

NG >> Replace power window main switch (door lock/unlock switch).

Door Lock/Unlock Switch (Passenger Side) Check

AIS0062S

1. CHECK DOOR LOCK/UNLOCK SWITCH SIGNAL

Check continuity between smart entrance control unit harness connector connector and ground.

Connector	Terminals (Wire color)		Condition of door lock/unlock switch (passenger side)	Voltage (V) (Approx.)
	(+)	(-)		
M90	4 (PU)	Ground	Unlock	0
			Neutral / Lock	5
	5 (GY)		Lock	0
			Neutral / Unlock	5

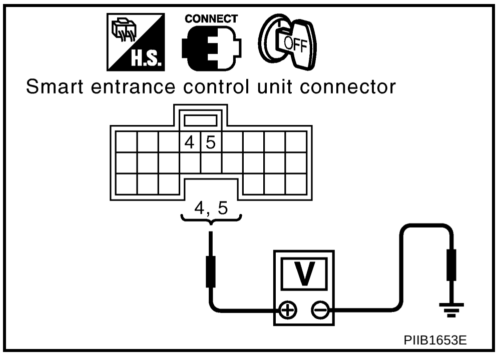

OK or NG

OK >> Door lock/unlock switch (passenger side) circuit is OK.
NG >> GO TO 2.

2. CHECK DOOR LOCK/UNLOCK SWITCH

1. Turn ignition switch OFF.
2. Disconnect door lock/unlock switch (passenger side) connector.
3. Check continuity between door lock/unlock switch (passenger side) terminals 1, 2 and 3.

Terminals		Condition of door lock/unlock switch (passenger side)	Continuity
1	3	Unlock	Yes
		Neutral / Lock	No
2		Lock	Yes
		Neutral / Unlock	No

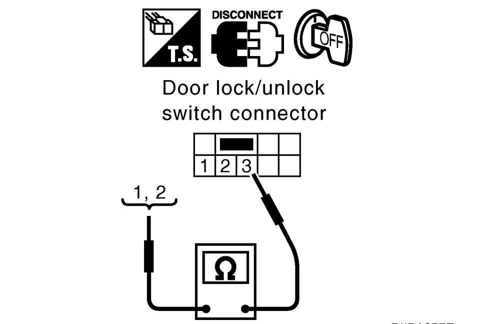

PIIB1655E

OK or NG

OK >> Check the following.
- Ground circuit for door lock/unlock switch (passenger side)
- Harness for open or short between door lock/unlock switch (passenger side) and smart entrance control unit connector

NG >> Replace door lock/unlock switch (passenger side).

Door Key Cylinder Switch (Driver Side) Check

AIS005XH

1. CHECK DOOR KEY CYLINDER SWITCH SIGNAL

Check voltage between smart entrance control unit harness connector and ground.

Connector	Terminals (Wire color)		Condition of door key cylinder switch (driver side)	Voltage (V) (Approx.)
	(+)	(-)		
M90	10 (GY/R)	Ground	Unlock	0
			Neutral / Lock	5
	11 (Y/PU)		Lock	0
			Neutral / Unlock	5

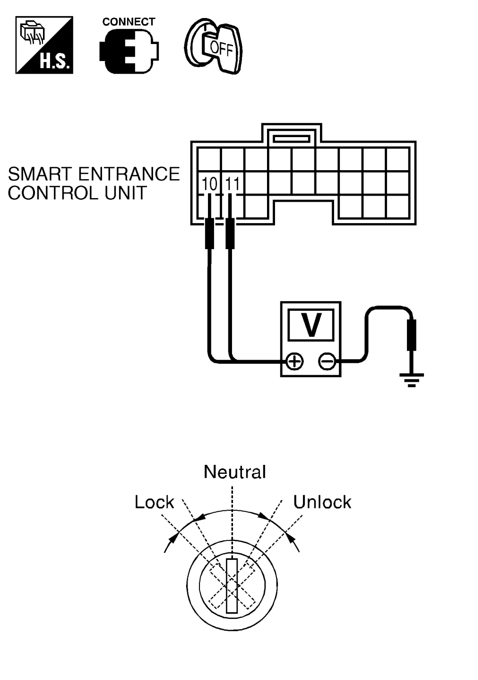

SIIA1521E

OK or NG

OK >> Door key cylinder switch (driver side) circuit is OK.
NG >> GO TO 2.

2. CHECK DOOR KEY CYLINDER SWITCH

1. Turn ignition switch OFF.
2. Disconnect door key cylinder switch (driver side) connector.
3. Check continuity between door key cylinder switch (driver side) terminals 1, 3 and 2.

Terminal		Condition of door key cylinder switch (driver side)	Continuity
1	2	Lock	Yes
		Neutral / Unlock	No
3		Unlock	Yes
		Neutral / Lock	No

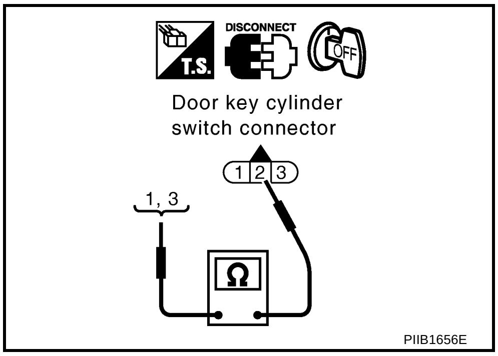

OK or NG

OK >> Check the following.
- Door key cylinder switch (driver side) ground circuit
- Harness for open or short between time control unit and door key cylinder switch (driver side)

NG >> Replace door key cylinder switch (driver side).

Door Key Cylinder Switch (Passenger Side) Circuit Check

AIS0062T

1. CHECK DOOR KEY CYLINDER SWITCH SIGNAL

Check voltage between smart entrance control unit harness connector and ground.

Connector	Terminals (Wire color)		Condition of door key cylinder switch (passenger side)	Voltage (V) (Approx.)
	(+)	(-)		
M90	10 (GY/R)	Ground	Unlock	0
			Neutral / Lock	5
	11 (Y/PU)		Lock	0
			Neutral / Unlock	5

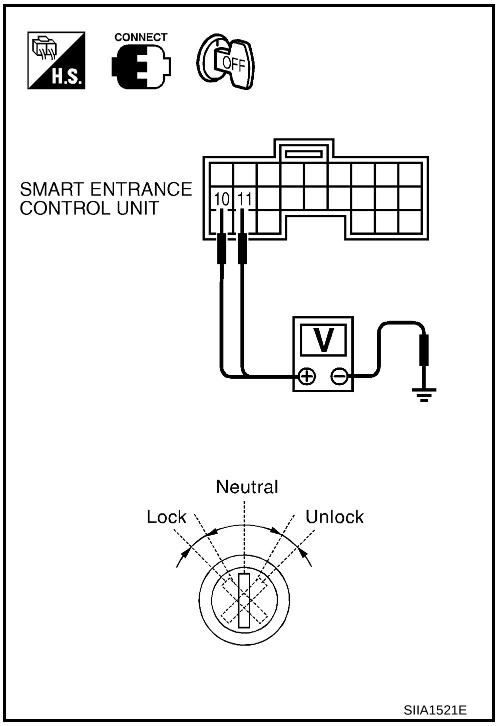

OK or NG

OK >> Door key cylinder switch (passenger side) circuit is OK.
NG >> GO TO 2.

2. CHECK DOOR KEY CYLINDER SWITCH

1. Turn ignition switch OFF.
2. Disconnect door key cylinder switch (passenger side) connector.
3. Check continuity between door key cylinder switch (passenger side) terminals 1, 3 and 2.

Terminal		Condition of door key cylinder switch (passenger side)	Continuity
1	2	Unlock	Yes
		Neutral / Lock	No
3		Lock	Yes
		Neutral / Unlock	No

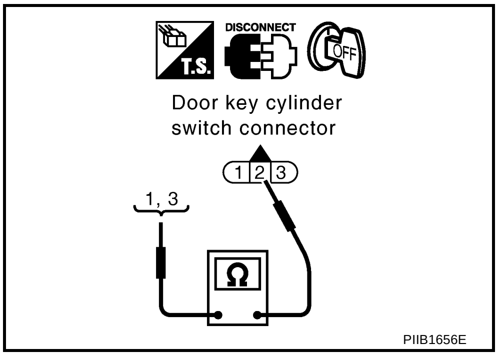

OK or NG

OK >> Check the following.
- Door key cylinder switch (passenger side) ground circuit
- Harness for open or short between time control unit and door key cylinder switch (passenger side)

NG >> Replace door key cylinder switch (passenger side).

Front Door Lock Actuator (Driver Side) Check

AIS005XI

1. CHECK DOOR LOCK/UNLOCK SIGNAL

1. Turn ignition switch OFF.
2. Disconnect front door lock actuator (driver side) connector.
3. Check voltage between front door lock actuator (driver side) harness connector and ground.

Connector	Terminals (Wire color)		Condition of door lock/unlock switch	Voltage [V] (Approx.)
	(+)	(-)		
D9	3 (L)	Ground	Lock	Battery voltage
			Except above	0
	6 (G/R)		Unlock	Battery voltage
			Except above	0

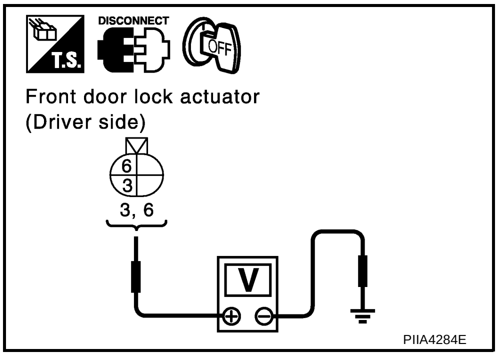

OK or NG

OK >> Replace front door lock actuator (driver side).
NG >> GO TO 2.

2. CHECK DOOR LOCK ACTUATOR CIRCUIT

1. Disconnect smart entrance control unit connector.
2. Check continuity between front door lock actuator (driver side) harness connector D9 terminal 3, 6 and smart entrance control unit herness connector M92 terminal 54, 55.

3 (L) – 54 (R/B) : Continuity should exist.
6 (G/R) – 55 (G/Y) : Continuity should exist.

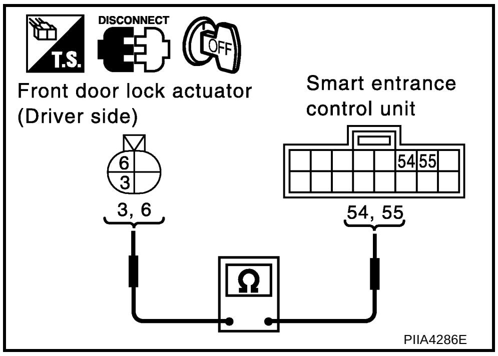

OK or NG

OK >> Check harness connection.
NG >> Repair or replace harness.

Front Door Lock Actuator (Passenger Side) Check

AIS005XJ

1. CHECK DOOR LOCK/UNLOCK SIGNAL

1. Turn ignition switch OFF.
2. Disconnect front door lock actuator (passenger side) connector.
3. Check voltage between front door lock actuator (passenger side) harness connector and ground.

Connector	Terminals (Wire color)		Condition of door lock/unlock switch	Voltage [V] (Approx.)
	(+)	(-)		
D17	4 (R/B)	Ground	Lock	Battery voltage
			Except above	0
	1 (G/R)		Unlock	Battery voltage
			Except above	0

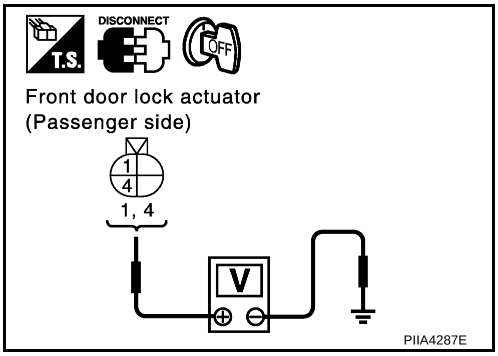

OK or NG

OK >> Replace front door lock actuator (passenger side).
NG >> GO TO 2.

2. CHECK DOOR LOCK ACTUATOR CIRCUIT

1. Disconnect smart entrance control unit connector.
2. Check continuity between front door lock actuator (passenger side) harness connector D17 terminal 1, 4 and smart entrance control unit harness connector M92 terminal 54, 56.

4 (R/B) – 54 (R/B) : Continuity should exist.
1 (G/R) – 56 (G/R) : Continuity should exist.

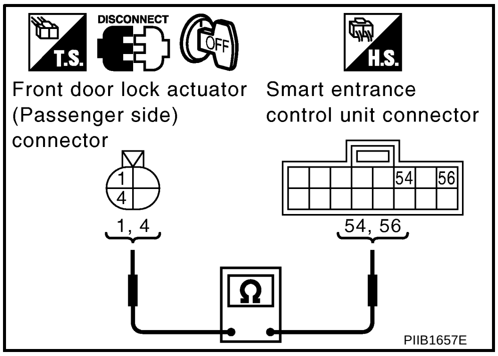

OK or NG

OK >> Check harness connection.
NG >> Repair or replace harness.

Rear Door Lock Actuator LH Check

AIS005XK

1. CHECK DOOR LOCK/UNLOCK SIGNAL

1. Turn ignition switch OFF.
2. Disconnect rear door lock actuator LH connector.
3. Check voltage between rear door lock actuator harness connector and ground.

Connector	Terminals (Wire color)		Condition of door lock/unlock switch	Voltage [V] (Approx.)
	(+)	(-)		
D36	4 (R/B)	Ground	Lock	Battery voltage
			Except above	0
	1 (G/R)		Unlock	Battery voltage
			Except above	0

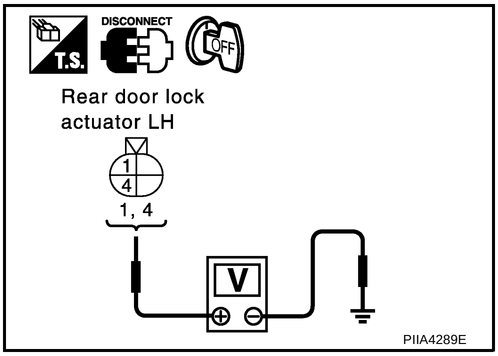

PIIA4289E

OK or NG

OK >> Replace rear door lock actuator LH.
NG >> GO TO 2.

2. CHECK DOOR LOCK ACTUATOR CIRCUIT

1. Disconnect smart entrance control unit connector.
2. Check continuity between rear door lock actuator LH harness connector D36 terminal 1, 4 and smart entrance control unit harness connector M92 terminal 54, 56.

4 (R/B) – 54 (R/B) : Continuity should exist.
1 (G/R) – 56 (G/R) : Continuity should exist.

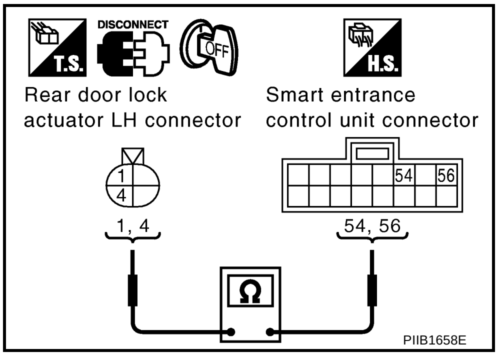

PIIB1658E

OK or NG

OK >> Check harness connection.
NG >> Repair or replace harness.

Rear Door Lock Actuator RH Check

AIS005XL

1. CHECK DOOR LOCK/UNLOCK SIGNAL

1. Turn ignition switch OFF.
2. Disconnect rear door lock actuator RH connector.
3. Check voltage between rear door lock actuator harness connector and ground.

Connector	Terminals (Wire color)		Condition of door lock/unlock switch	Voltage [V] (Approx.)
	(+)	(-)		
D26	3 (R/B)	Ground	Lock	Battery voltage
			Except above	0
	6 (G/R)		Unlock	Battery voltage
			Except above	0

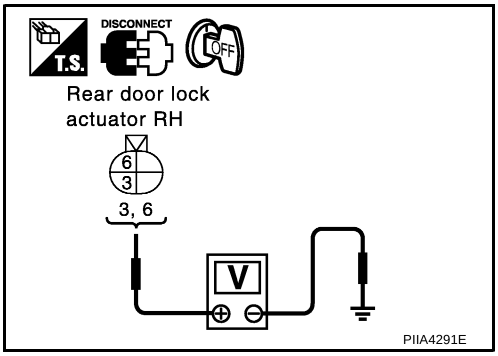

PIIA4291E

OK or NG

OK >> Replace rear door lock actuator RH.
NG >> GO TO 2.

2. CHECK DOOR LOCK ACTUATOR CIRCUIT

1. Disconnect smart entrance control unit connector.
2. Check continuity between rear door lock actuator RH harness connector D26 terminal 3, 6 and smart entrance control unit harness connector M92 terminal 54, 56.

3 (R/B) – 54 (R/B) : Continuity should exist.
6 (G/R) – 56 (G/R) : Continuity should exist.

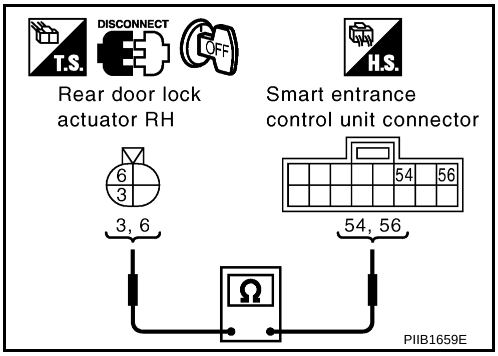

PIIB1659E

OK or NG

OK >> Check harness connection.
NG >> Check harness for open or short between smart entrance control unit and rear door lock actuator RH.

Back Door Lock Actuator Check

AIS005XM

1. CHECK DOOR LOCK/UNLOCK SIGNAL

1. Turn ignition switch OFF.
2. Disconnect back door lock actuator connector.
3. Check voltage between door lock actuator harness connector and ground.

Connector	Terminals (Wire color)		Condition of door lock/unlock switch	Voltage [V] (Approx.)
	(+)	(-)		
D46	2 (R/B)	Ground	Lock	Battery voltage
			Except above	0
	4 (G/R)		Unlock	Battery voltage
			Except above	0

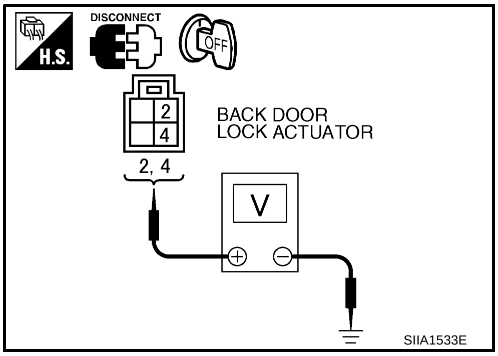

SIIA1533E

OK or NG

OK >> Replace back door lock actuator.
NG >> GO TO 2.

2. CHECK DOOR LOCK ACTUATOR CIRCUIT

1. Disconnect smart entrance control unit connector.
2. Check continuity between back door lock actuator harness connector D46 terminal 2, 4 and smart entrance control unit harness connector M92 terminal 54, 56.

2 (R/B) – 54 (R/B) : Continuity should exist.
4 (G/R) – 56 (G/R) : Continuity should exist.

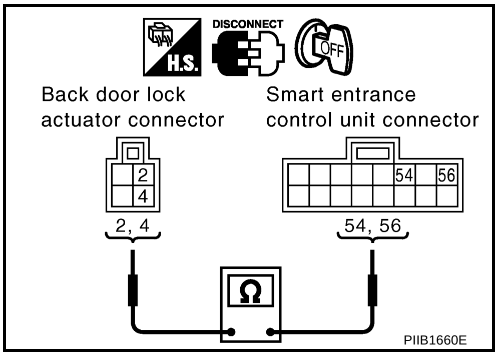

PIIB1660E

OK or NG

OK >> Check harness connection.
NG >> Repair or replace harness.

Front Door Switch (Driver Side) Check

AIS005XN

1. CHECK DOOR SWITCH INPUT SIGNAL

1. Turn ignition switch OFF.
2. Check voltage between smart entrance control unit harness connector and ground.

Connector	Terminal (Wire color)		Condition of front door (driver side)	Voltage [V] (Approx.)
	(+)	(-)		
M90	1 (SB)	Ground	Close	5
			Open	0

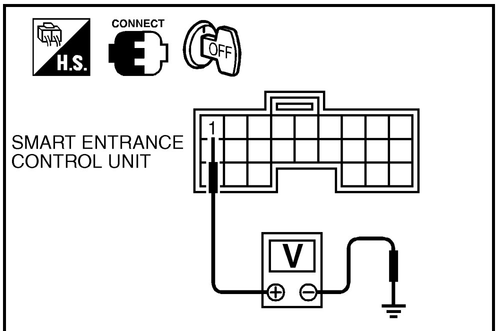

SIIA1536E

OK or NG

OK >> Door switch circuit is OK.
NG >> GO TO 2.

2. CHECK DOOR SWITCH

1. Disconnect front door switch (driver side) connector.
2. Check continuity of front door switch (driver side).

Terminal		Condition of front door switch (driver side)	Continuity
2	3	Pushed	No
		Released	Yes

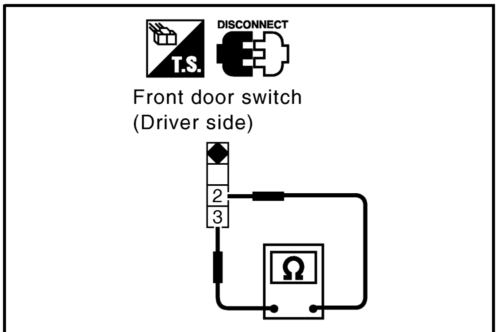

PIIB1489E

OK or NG

OK >> Check the following.
- Front door switch (driver side) ground circuit or ground condition.
- Harness for open or short between smart entrance control unit and front door switch (driver side).

NG >> Replace front door switch (driver side).

All Door Switch Check

AIS005XO

1. CHECK DOOR SWITCH INPUT SIGNAL

1. Turn ignition switch OFF.
2. Check voltage between smart entrance control unit harness connector and ground.

Connector	Terminal (Wire color)		Condition of door	Voltage [V] (Approx.)
	(+)	(-)		
M90	2 (R/W)	Ground	Close	5
			Open	0

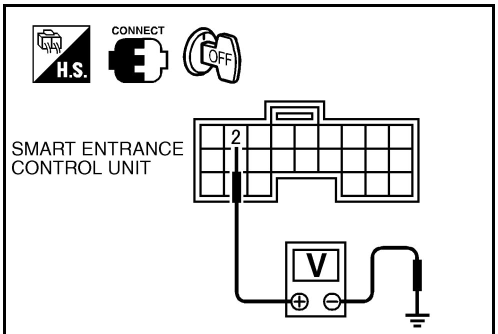

SIIA1538E

OK or NG

OK >> Door switch circuit is OK.
NG >> GO TO 2.

2. CHECK DOOR SWITCH

FRONT DOOR AND REAR DOOR

1. Disconnect door switch connector.
2. Check continuity between door switch terminal 1 and ground part of door switch.

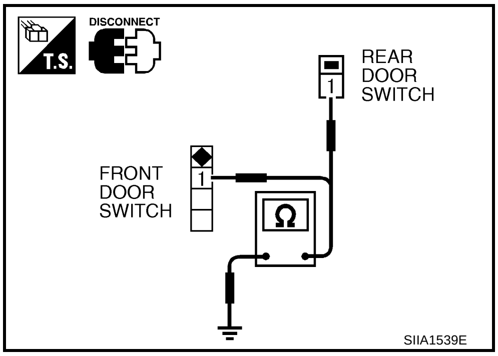

Terminal		Condition of door switch	Continuity
1	Ground part of door switch	Pushed	No
		Released	Yes

BACK DOOR

1. Disconnect door switch connector.
2. Check continuity of back door switch terminal 1 and 3.

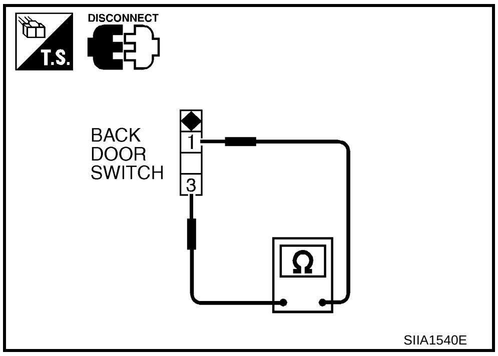

Terminal		Condition of back door switch	Continuity
1	3	Pushed	No
		Released	Yes

OK or NG

OK >> Check the following.

- Door switch ground circuit or door switch ground condition
- Harness for open or short between smart entrance control unit and door switch

NG >> Replace door switch.

Key Switch Check

AIS005XP

1. CHECK KEY SWITCH INPUT SIGNAL

Check voltage between smart entrance control unit harness connector and ground.

Connector	Terminal (Wire color)		Condition of ignition key cylinder	Voltage [V] (Approx.)
	(+)	(-)		
M91	25 (W/L)	Ground	Key is inserted.	Battery voltage
			Key is removed.	0

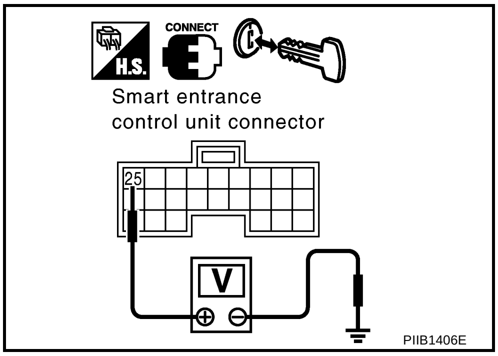

OK or NG

OK >> Key switch circuit is OK.
NG >> GO TO 2.

2. CHECK KEY SWITCH (INSERT)

1. Turn ignition switch OFF.
2. Disconnect key switch connector.
3. Check continuity between key switch terminals 1 and 2.

Terminals		Condition of ignition key cylinder	Continuity
1	2	Key is inserted	Yes
		Key is removed	No

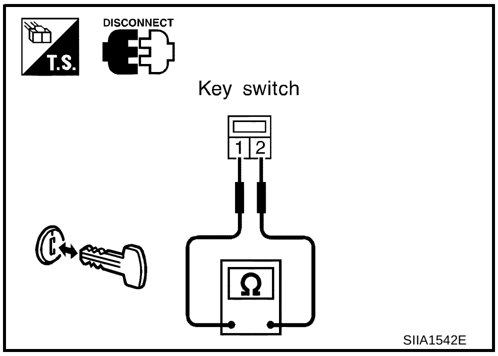

OK or NG

OK >> Check the following.
- 10A fuse [No. 28, located in fuse block (J/B)]
- Harness for open or short between key switch and fuse
- Harness for open or short between smart entrance control unit and key switch

NG >> Replace key switch.

MULTI-REMOTE CONTROL SYSTEM

PFP:28596

Component Parts and Harness Connector Location

AIS005XQ

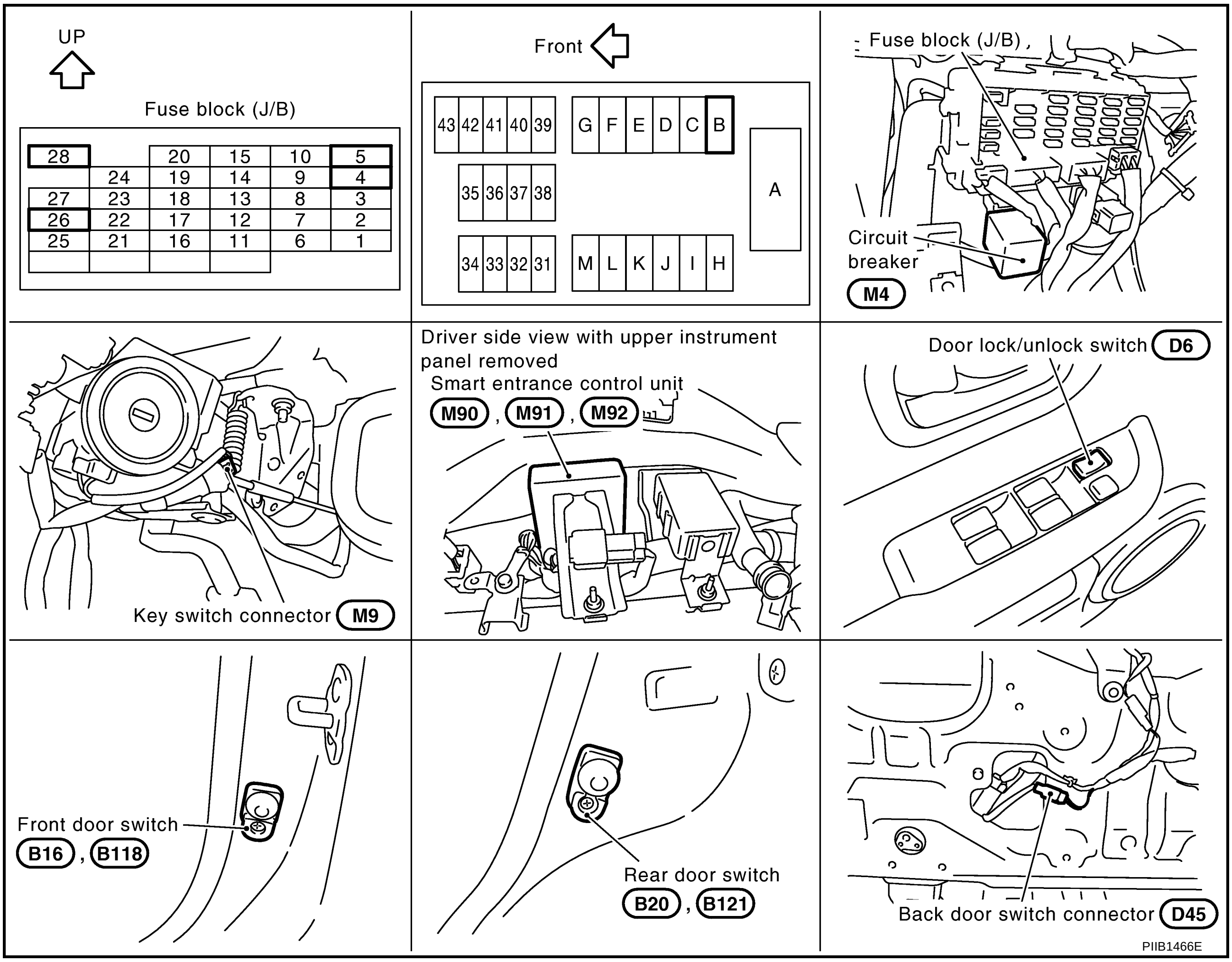

PIIB1466E

System Description

AIS005XR

INPUTS

Power is supplied at all times

- to key switch terminal 1
- through 10A fuse [No.28 located in the fuse block (J/B)].

When the key switch is ON (Ignition key is inserted in key cylinder), power is supplied

- to smart entrance control unit terminal 25
- through key switch terminal 2.

When the front door switch driver side is ON (door is open), ground supplied

- to smart entrance control unit terminal 1
- through door switch driver side terminal 2
- to door switch driver side terminal 3
- through body grounds B8 and B18.

When the any door switches (except back door) are ON (door is open), ground is supplied

- to smart entrance control unit terminal 2
- through each door switch terminal 1
- from each door switch case ground.

When the back door is ON (back door is open), ground is supplied

- to smart entrance control unit terminal 2
- through back door switch terminal 1 and 3

- from body ground D53.

When power window main switch (door lock/unlock switch) is LOCK, ground supplied

- to smart entrance control unit terminal 5
- through power window main switch (door lock/unlock switch) terminal 18
- through power window main switch (door lock/unlock switch) terminal 19
- through body grounds M27 and M70.

When power window main switch (door lock/unlock switch) is UNLOCK, ground supplied

- to smart entrance control unit terminal 4
- through power window main switch (door lock/unlock switch) terminal 17
- through power window main switch (door lock/unlock switch) terminal 19
- through body grounds M27 and M70.

When door lock/unlock switch (passenger side) is LOCK, ground supplied

- to smart entrance control unit terminal 5
- through door lock/unlock switch (passenger side) terminal 2
- through door lock/unlock switch (passenger side) terminal 3
- through body grounds M27 and M70.

When door lock/unlock switch (passenger side) is UNLOCK, ground supplied

- to smart entrance control unit terminal 4
- through door lock/unlock switch (passenger side) terminal 1
- through door lock/unlock switch (passenger side) terminal 3
- through body grounds M27 and M70.

Key fob signal is inputted to smart entrance control unit (The antenna of the system is combined with smart entrance control unit).

The multi-remote control system controls operation of the

- power door lock
- hazard and horn reminder
- interior room lamp
- panic alarm

OPERATED PROCEDURE

Power Door Lock Operation

When the following input signals are both supplied:

- key switch OFF (when ignition key is not inserted in key cylinder)
- door switch OFF (when all the doors are closed);

Smart entrance control unit receives a LOCK signal from key fob. Smart entrance control unit locks all doors with input of LOCK signal from key fob.
When an UNLOCK signal is sent from key fob once, driver's door will be unlocked.
Then, if an UNLOCK signal is sent from key fob again within 5 seconds, all other door will be unlocked.

Hazard and Horn Reminder

Power is supplied at all time

- to horn relay terminal 2
- through 10A fuse [No. 34, located in the fuse and fusible link box]

When smart entrance control unit receives LOCK or UNLOCK signal from key fob with all doors closed, ground supplied

- to horn relay terminal 1
- through smart entrance control unit terminal 42

Horn relay are now energized, and hazard warning lamp flashes and horn sounds as a reminder.
The hazard and horn reminder has C mode (horn chirp mode) and S mode (non-horn chirp mode).

Operating function of hazard and horn reminder

	C mode		S mode	
	Hazard warning lamp flash	Horn sound	Hazard warning lamp flash	Horn sound
Lock	Twice	Once	Twice	—
Unlock	Once	—	—	—

Interior Room Lamp Operation

When the following input signals are all supplied:

- door switch OFF (when all the doors are closed);
- driver's door LOCKED (with key fob);
- key switch OFF (when ignition key is not inserted in key cylinder).

multi-remote control system turns on interior room lamp (for 30 seconds) with input of UNLOCK signal from remote controller.
For detailed description, refer to LT-50, "INTERIOR ROOM LAMP" .

Panic Alarm Operation

When key switch is OFF (when ignition key is not inserted in key cylinder), multi-remote control system turns on and OFF horn intermittently with input of PANIC ALARM signal from key fob.
The alarm automatically turns off after 25 seconds or when smart entrance control unit receives any signal from key fob.
For detailed description, refer to BL-76, "VEHICLE SECURITY (THEFT WARNING) SYSTEM"

Schematic

AIS005XS

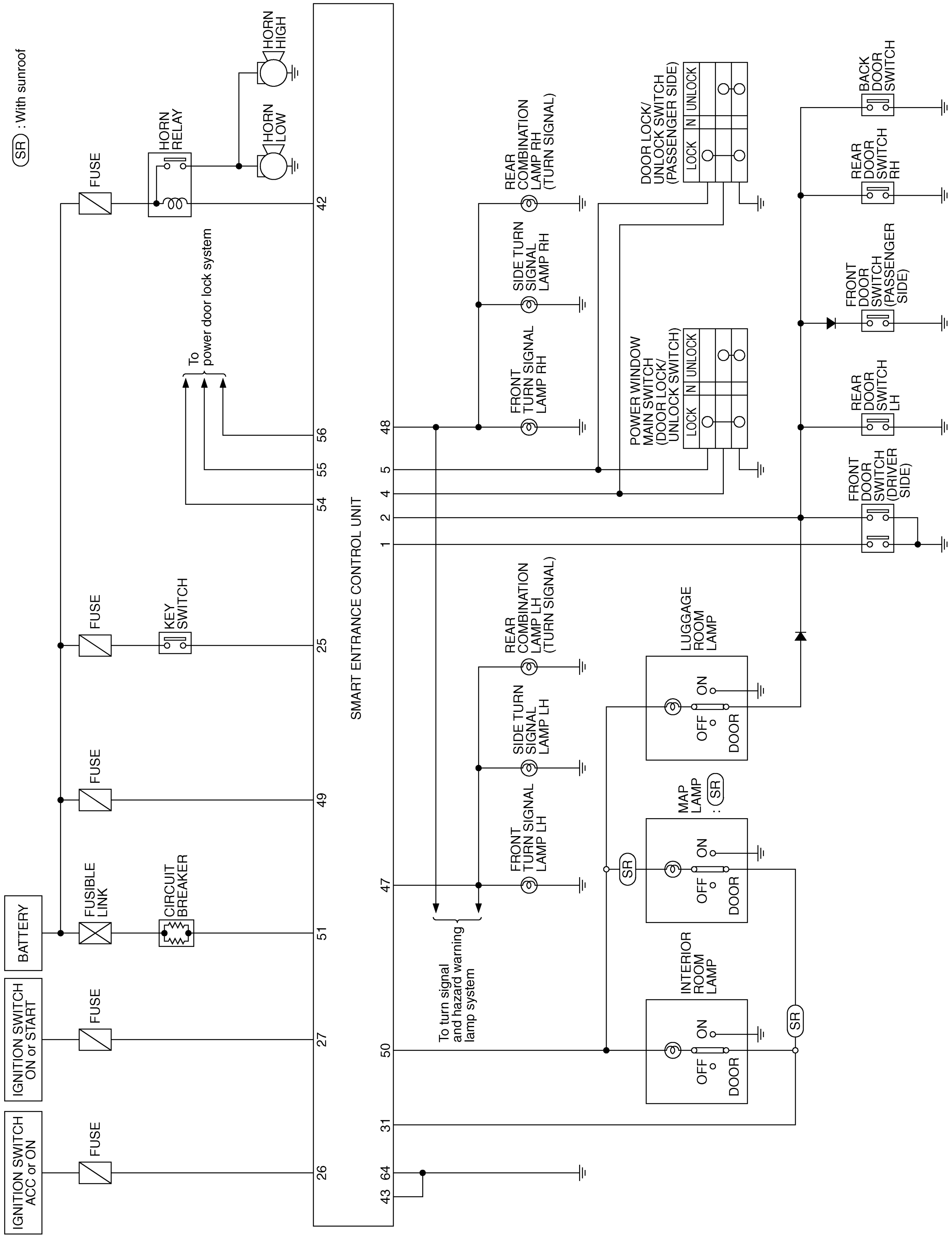

TIWB0048E

Wiring Diagram — MULTI —

AIS005XT

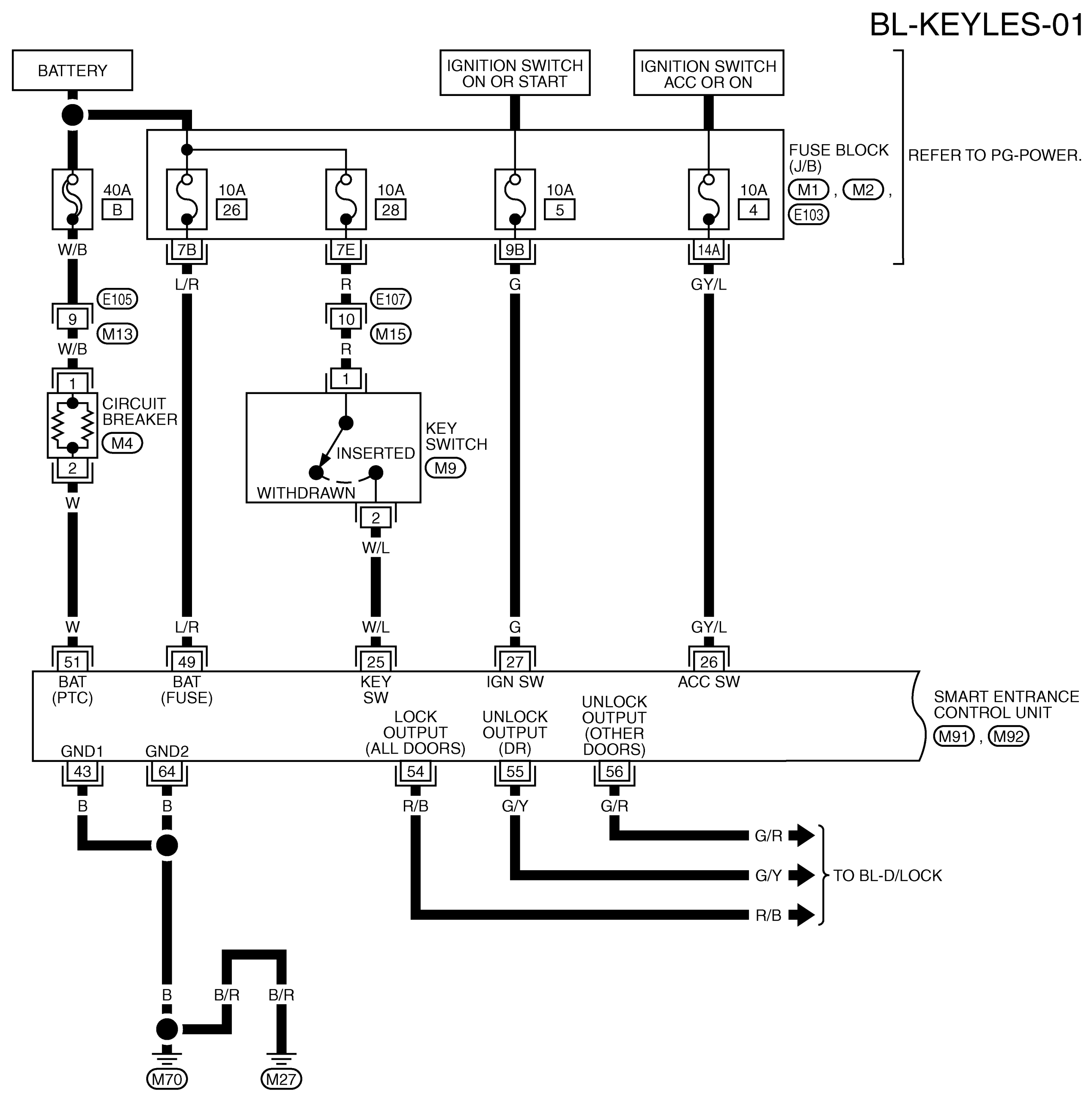

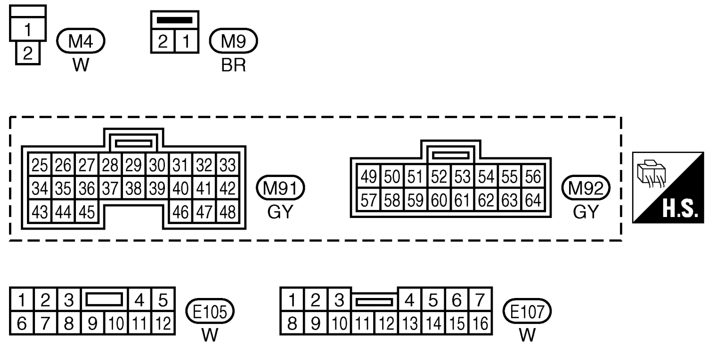

REFER TO THE FOLLOWING.
M1, M2, E103 -FUSE BLOCK-JUNCTION BOX (J/B)

TIWB0049E

BL-KEYLES-02

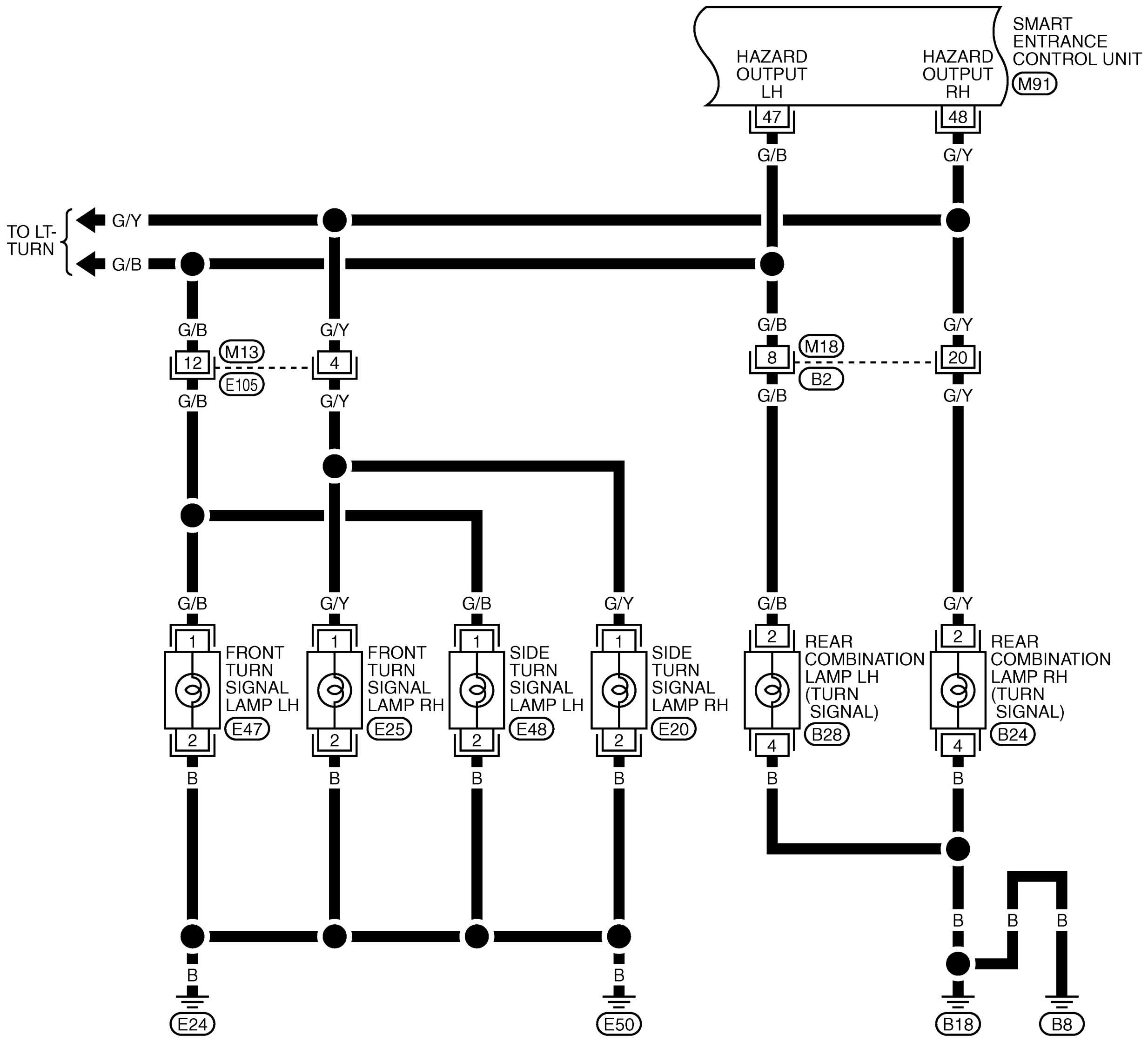

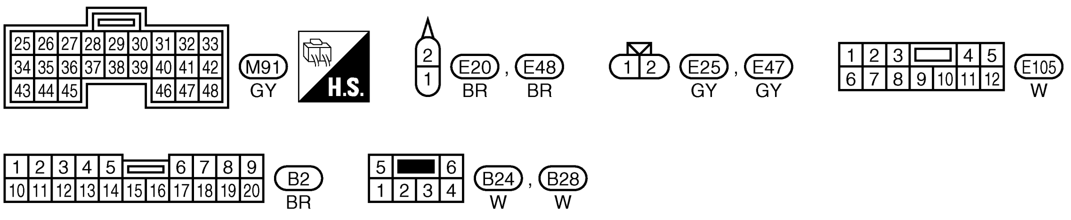

TIWB0050E

BL-KEYLES-03

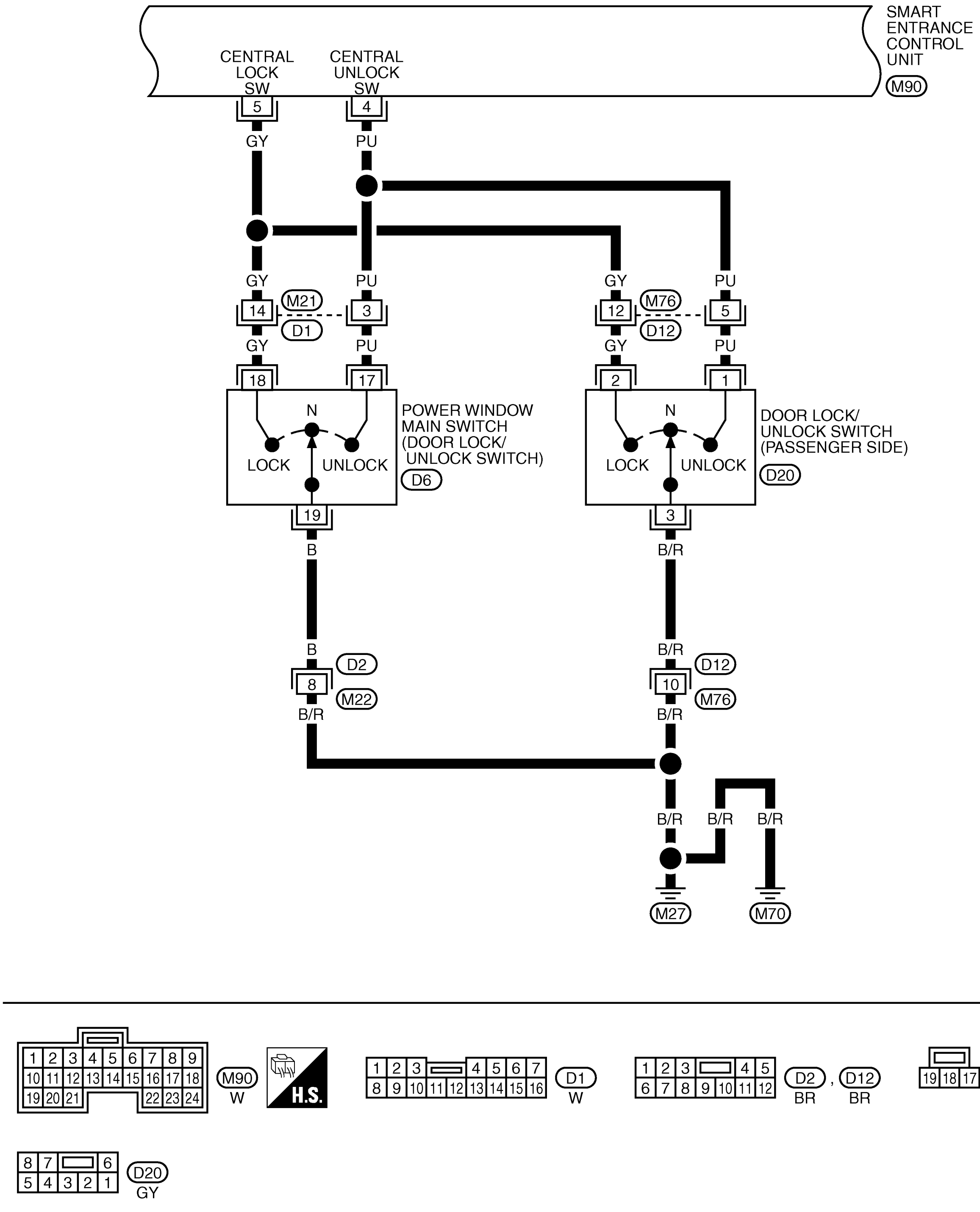

TIWB0051E

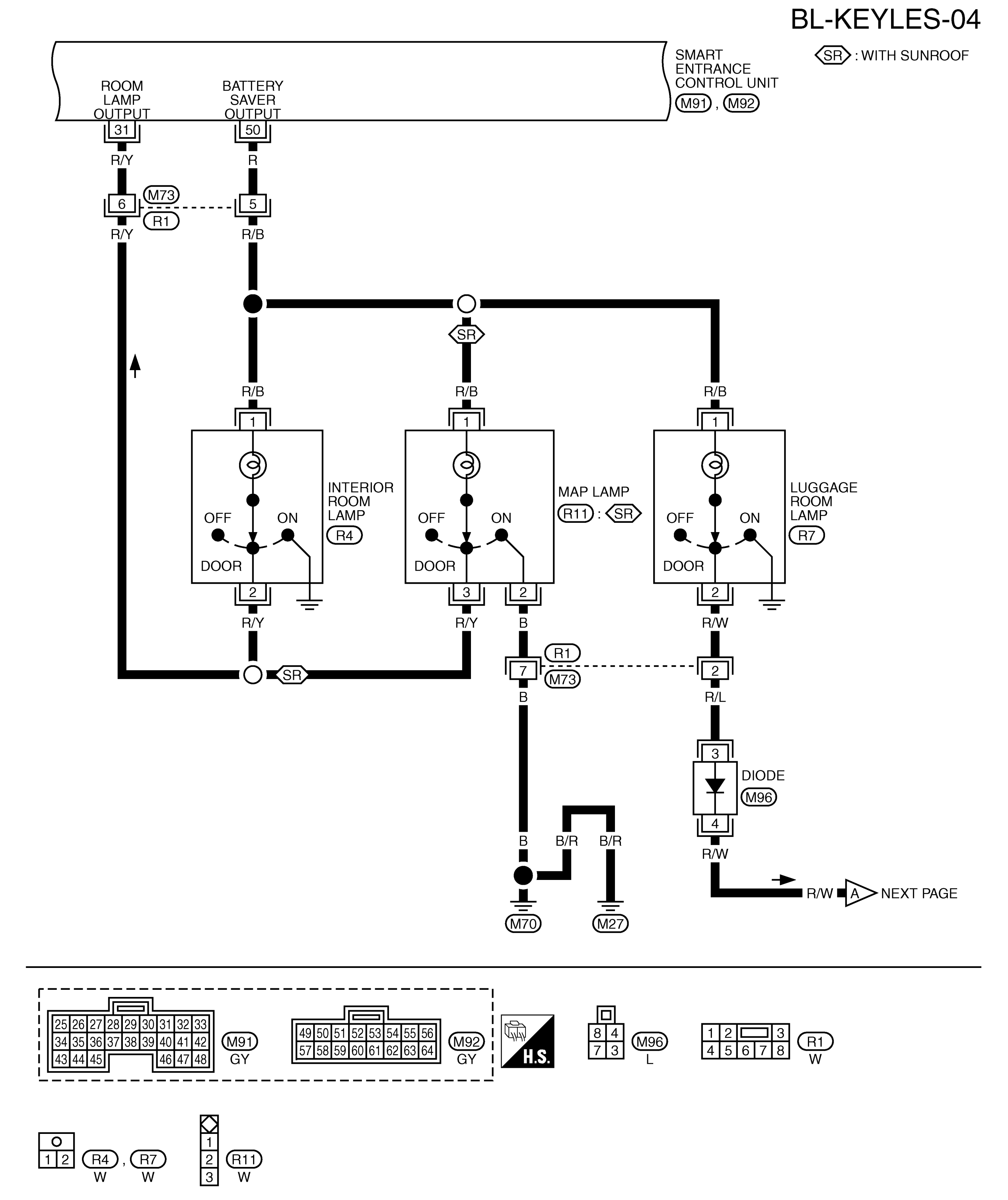
BL-KEYLES-04
SR : WITH SUNROOF
SMART ENTRANCE CONTROL UNIT
M91 , M92
ROOM LAMP OUTPUT
BATTERY SAVER OUTPUT
31
50
R/Y
R
M73
R1
6
5
R/B
SR
INTERIOR ROOM LAMP
R4
MAP LAMP
R11 : SR
LUGGAGE ROOM LAMP
R7
OFF
ON
DOOR
R/W
B
7
2
R/L
DIODE
M96
3
4
B/R
M70
M27
R/W
A
NEXT PAGE
M91 GY
M92 GY
H.S.
M96 L
R1 W
R4 , R7 W W
R11 W
TIWB0052E

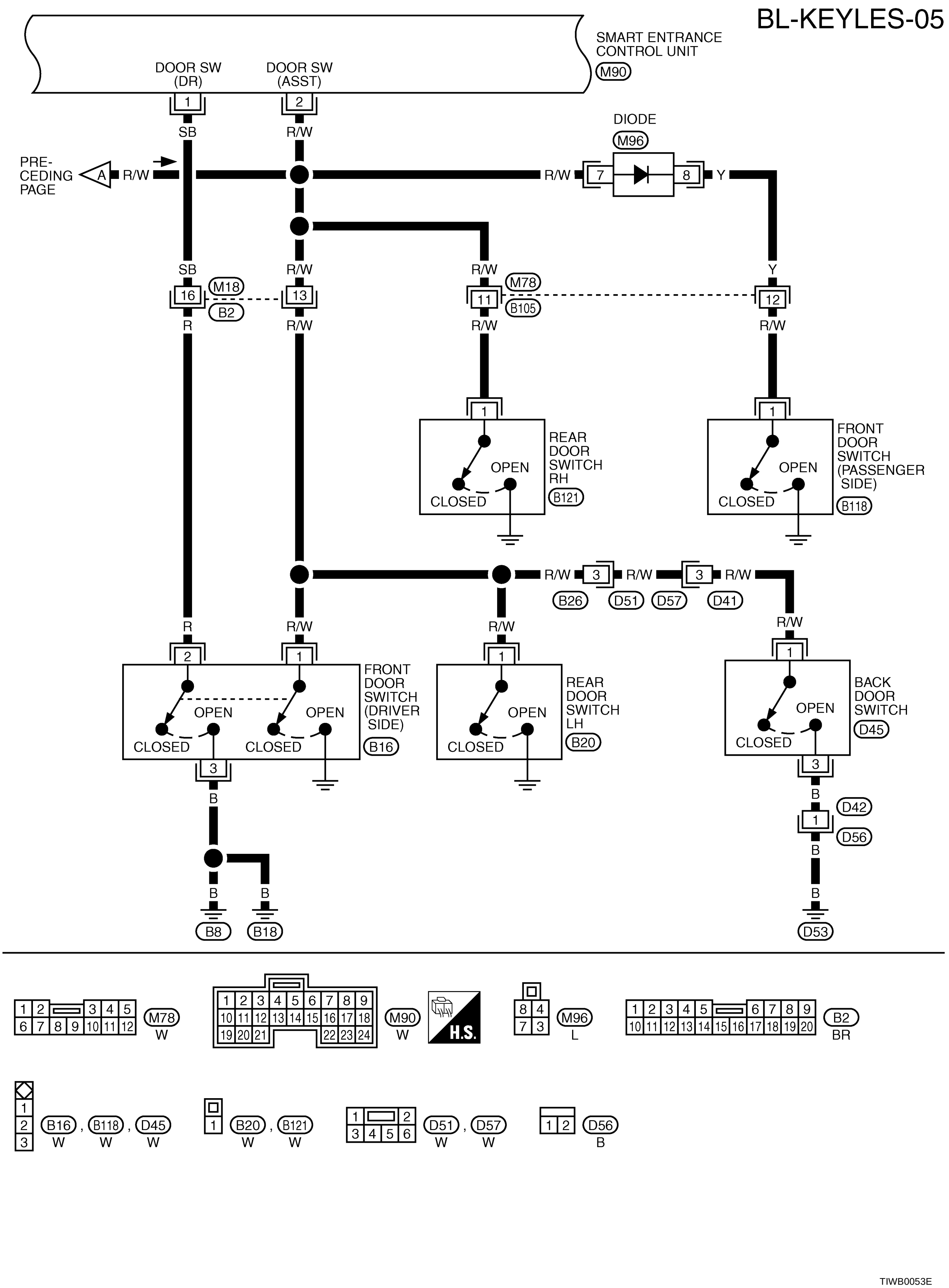
BL-KEYLES-05
SMART ENTRANCE CONTROL UNIT
M90
DOOR SW (DR)
DOOR SW (ASST)
PRE-CEDING PAGE
A
R/W
SB
DIODE
M96
Y
M18
B2
M78
B105
R
REAR DOOR SWITCH RH
B121
FRONT DOOR SWITCH (PASSENGER SIDE)
B118
OPEN
CLOSED
B26
D51
D57
D41
FRONT DOOR SWITCH (DRIVER SIDE)
B16
REAR DOOR SWITCH LH
B20
BACK DOOR SWITCH
D45
B
D42
D56
B8
B18
D53
W
L
BR
H.S.
TIWB0053E

BL-KEYLES-06

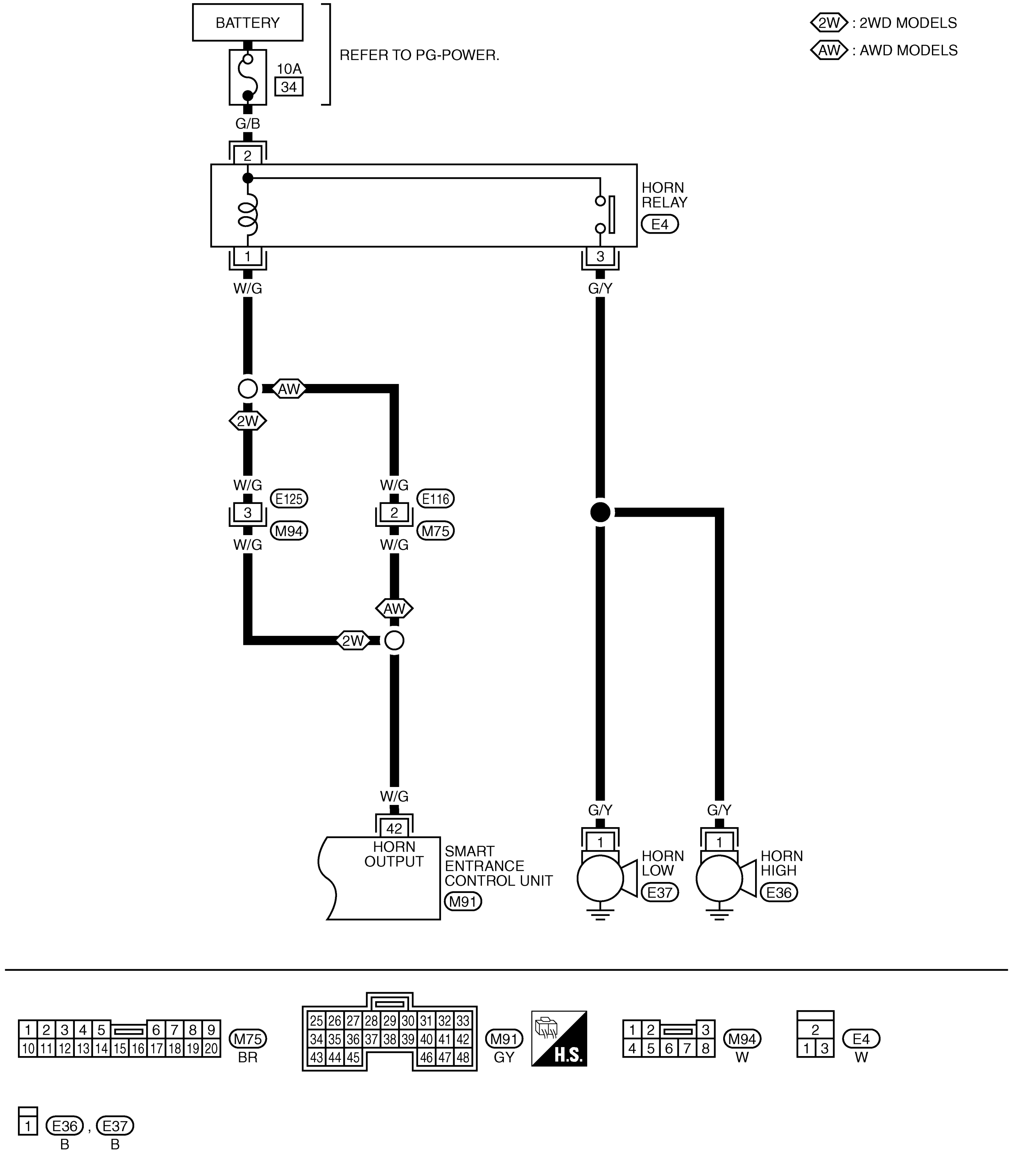

TIWB0054E

Terminal and Reference Value for Smart Entrance Control Unit

AIS005XU

Terminal	Wire color	Item	Condition	Voltage [V] (Approx.)
1	SB	Driver door switch	OFF (CLOSED) → ON (OPEN)	5 → 0
2	R/W	All door switch	OFF (CLOSED) → ON (OPEN)	5 → 0
4	PU	Door lock/unlock switch (UNLOCK)	Neutral → Unlock	5 → 0
5	GY	Door lock/unlock switch (LOCK)	Neutral → Lock	5 → 0
25	W/L	Ignition key switch (Insert)	Key inserted → Key removed from ignition key cylinder	Battery voltage → 0
26	GY/L	Ignition switch (ACC)	Ignition key is in (ACC or ON position)	Battery voltage
27	G	Ignition switch (ON)	Ignition key is in (ON or START position)	Battery voltage
31	R/Y	Interior room lamp	When doors are locked using remote controller (Lamp switch in “DOOR” position)	Battery voltage
42	W/G	Horn relay	When panic alarm is operated using remote controller (ON → OFF)	0 → Battery voltage
43	B	Ground	—	0
47	G/B	Hazard reminder (Turn signal lamp LH)	When door lock or unlock operated using remote controller (ON → OFF)	0 → Battery voltage
48	G/Y	Hazard reminder (Turn signal lamp RH)	When door lock or unlock operated using remote controller (ON → OFF)	0 → Battery voltage
49	L/R	Power source (Fuse)	—	Battery voltage
50	R	Battery saver (Interior room lamp)	Battery saver dose operate → does not operate (ON → OFF)	Battery voltage → 0
51	W	Power source (PTC)	—	Battery voltage
54	R/B	All door lock actuator (Lock)	Door lock/unlock switch (Neutral → Lock)	0 → Battery voltage → 0
55	G/Y	Driver door lock actuator (Unlock)	Door lock/unlock switch (Neutral →Unlock)	0 → Battery voltage → 0
56	G/R	Other door lock actuators (Unlock)	Door lock/unlock switch (Neutral → Unlock)	0 → Battery voltage → 0
64	B	Ground	—	0

Symptom Chart

AIS005XV

NOTE:

- Always check remote controller battery before replacing remote controller.
- The panic alarm operation and the interior room lamp operation of multi-remote control system do not activate with the ignition key inserted in the key cylinder.

Symptom	Diagnosis/service procedure	Reference page
All function of multi-remote control system do not operate.	1. Remote controller battery check	BL-57
	2. Power supply and ground circuit check	BL-57
	3. If above systems are OK, replace smart entrance control unit.	—
The new ID of key fob cannot be entered.	1. Key fob battery check	BL-57
	2. Key switch circuit check	BL-60
	3. Front door switch (Driver side) circuit check	BL-59
	4. All door switch circuit check	BL-59
	5. ACC switch circuit check	BL-57
	6. Door lock/unlock switch circuit check	BL-34
	7. Power supply and ground circuit check	BL-33
	8. If above systems are OK, replace smart entrance control unit.	—
Door lock or unlock does not function.	1. If the power door lock system does not operate manually, check power door lock system.	BL-23
	2. Key switch circuit check	BL-60
	3. Front door switch (Driver side) circuit check	BL-59
	4. All door switch circuit check	BL-59
	5. Key fob battery check	BL-57
	6. If above systems are OK, replace smart entrance control unit.	—
Hazard and horn reminder does not activate properly when pressing lock or unlock button of key fob.	1.Key fob battery check	BL-57
	2. Hazard reminder check	BL-61
	3.Horn reminder check (Horn chirp can be activated or deactivated.) **NOTE:** First check the horn chirp setting. Refer to BL-46, "Hazard and Horn Reminder"	BL-62
	4. Front door switch (Driver side) circuit check	BL-59
	5. All door switch circuit check	BL-59
	6. If above systems are OK, replace smart entrance control unit.	—
Interior room lamp operation does not activate properly.	1. Interior room lamp operation check	BL-62
	2. Front door switch (Driver side) circuit check	BL-59
	3. All door switch circuit check	BL-59
	4. Key switch circuit check	BL-60
	5. If above systems are OK, replace smart entrance control unit.	—
Panic alarm operation does not activate when panic alarm button is continuously pressed. (Horn reminder is OK.)	1. Key fob battery check	BL-57
	2. Key switch circuit check	BL-60
	3. If above systems are OK, replace smart entrance control unit.	—

Remote Controller Battery Check

AIS005XW

1. CHECK KEY FOB BATTERY

Remove battery and measure voltage across battery positive and negative terminals, (+) and (–).

Voltage : 2.5V – 3.0V

NOTE:
Key fob does not function if battery is not set correctly.

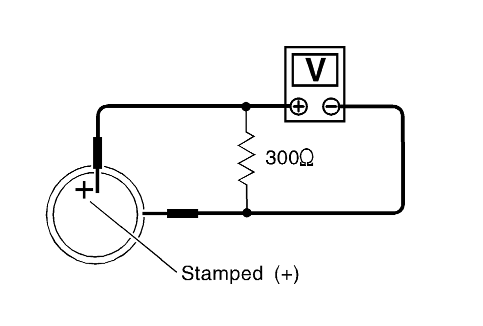

SEL237W

OK or NG

OK >> Check the following.
- Key fob battery terminals for corrosion or damage
- Further inspection is necessary. Refer to BL-56, "Symptom Chart" .

NG >> Replace battery. Refer to BL-64, "Key Fob Battery Replacement" .

ACC Switch Circuit Check

AIS005XX

1. CHECK FUSE

- Check 10A fuse [No. 4, located in the fuse block (J/B)].

NOTE:
Refer to BL-45, "Component Parts and Harness Connector Location"

OK or NG

OK >> GO TO 2.
NG >> If fuse is blown out, be sure to eliminate cause of malfunction before installing new fuse. Refer to PG-2, "POWER SUPPLY ROUTING" .

2. CHECK ACC SWITCH

Check voltage between smart entrance control unit connector and ground.

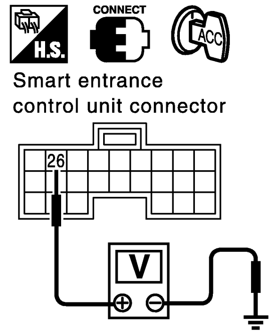

PIIA4259E

Connector	Terminal (Wire color) (+)	Terminal (Wire color) (–)	Condition of ignition switch	Voltage [V] (Approx.)
M91	26 (GY/L)	Ground	ACC or ON	Battery voltage
			OFF	0

OK or NG

OK >> ACC switch circuit is OK.
NG >> Check harness for open between smart entrance control unit and fuse.

Power Supply and Ground Circuit Check

AIS005XY

1. CHECK FUSE AND FUSIBLE LINK

- Check 40A fusible link (letter **B** , located in the fuse and fusible link box).
- Check 10A fuse [No. 5, located in the fuse block (J/B)].
- Check 10A fuse [No. 26, located in the fuse block (J/B)].

NOTE:
Refer to BL-45, "Component Parts and Harness Connector Location"

OK or NG

OK >> GO TO 2.
NG >> if fuse is blown out, be sure to eliminate cause of malfunction before installing new fuse. Refer to PG-2, "POWER SUPPLY ROUTING" .

2. CHECK POWER SUPPLY CIRCUIT FOR SMART ENTRANCE CONTROL UNIT

1. Turn ignition switch OFF.
2. Disconnect smart entrance control unit connector.
3. Check voltage between smart entrance control unit harness connector M92 terminal 49, 51 and ground.

49 (L/R) – Ground : Battery voltage

51 (W) – Ground : Battery voltage

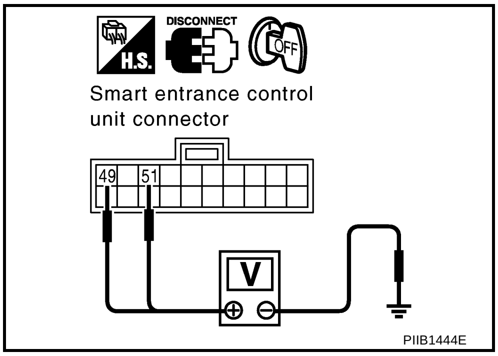

OK or NG

OK >> GO TO 3.

NG >> Check the following.
- Circuit breaker
- Harness for open between smart entrance control unit and fuse

3. CHECK IGNITION SWITCH ON CIRCUIT

1. Turn ignition switch ON.
2. Check voltage between smart entrance control unit harness connector M91 terminal 27 and ground.

27 (G) – Ground : Battery voltage

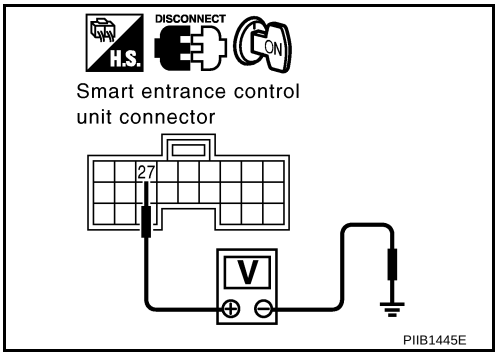

OK or NG

OK >> GO TO 4.

NG >> Check harness for open between smart entrance control unit and fuse.

4. CHECK GROUND CIRCUIT FOR SMART ENTRANCE CONTROL UNIT

1. Turn ignition switch OFF.
2. Check continuity between smart entrance control unit harness connector M91, M92 terminal 43, 64 and ground.

43 (B) – Ground : Continuity should exist.

64 (B) – Ground : Continuity should exist.

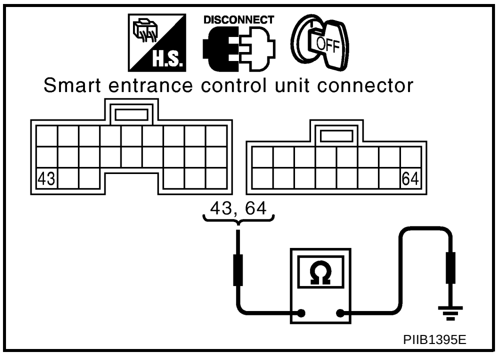

OK or NG

OK >> Power supply and ground circuits are OK.

NG >> Repair or replace harness.

Front Door Switch (Driver Side) Circuit Check

AIS005XZ

1. CHECK DOOR SWITCH INPUT SIGNAL

1. Turn ignition switch OFF.
2. Check voltage between smart entrance control unit harness connector and ground.

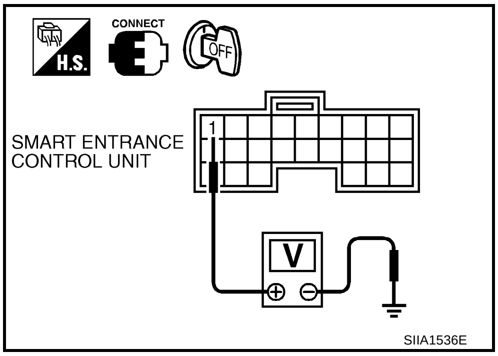

Connector	Terminal (Wire color)		Condition of front door (driver side)	Voltage [V] (Approx.)
	(+)	(–)		
M90	1 (SB)	Ground	Close	5
			Open	0

OK or NG

OK >> Door switch circuit is OK.
NG >> GO TO 2.

2. CHECK DOOR SWITCH

1. Disconnect front door switch (driver side) connector.
2. Check continuity of front door switch (driver side).

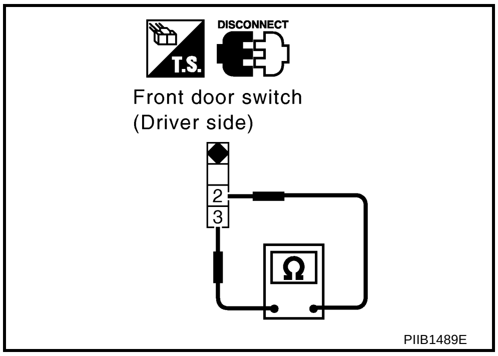

Terminal		Condition of front door switch (driver side)	Continuity
2	3	Pushed	No
		Released	Yes

OK or NG

OK >> Check the following.
- Front door switch (driver side) ground circuit
- Harness for open or short between smart entrance control unit and front door switch (driver side)

NG >> Replace front door switch (driver side).

All Door Switch Circuit Check

AIS005Y0

1. CHECK DOOR SWITCH INPUT SIGNAL

1. Turn ignition switch OFF.
2. Check voltage between smart entrance control unit harness connector and ground.

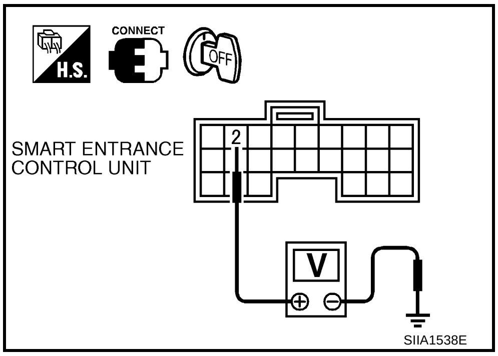

Connector	Terminal (Wire color)		Condition of door	Voltage [V] (Approx.)
	(+)	(-)		
M90	2 (R/W)	Ground	Close	5
			Open	0

OK or NG

OK >> Door switch circuit is OK.
NG >> GO TO 2.

2. CHECK DOOR SWITCH

Front door and rear door

1. Disconnect door switch connector.
2. Check continuity between door switch terminal 1 and ground part of door switch.

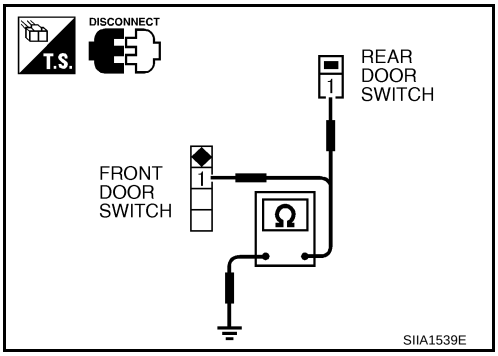

SIIA1539E

Terminal		Condition of door switch	Continuity
1	Ground part of door switch	Pushed	No
		Released	Yes

Back door

1. Disconnect door switch connector.
2. Check continuity of back door switch terminal 1 and 3.

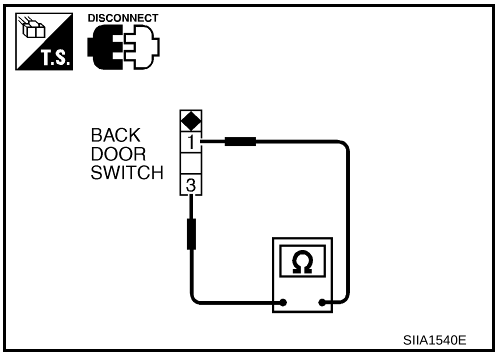

SIIA1540E

Terminal		Condition of back door switch	Continuity
1	3	Pushed	No
		Released	Yes

OK or NG

OK >> Check the following.
- Door switch ground circuit or door switch ground condition
- Harness for open or short between smart entrance control unit and door switch

NG >> Replace door switch.

Key Switch Circuit Check

AIS005Y1

1. CHECK KEY SWITCH INPUT SIGNAL

Check voltage between smart entrance control unit harness connector and ground.

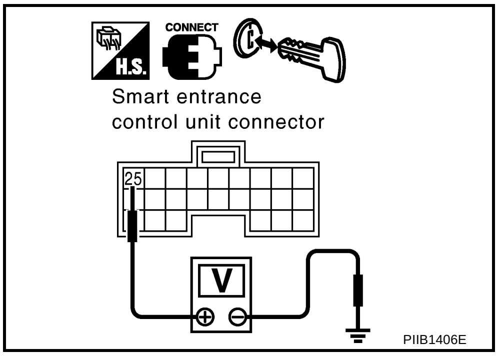

PIIB1406E

Connector	Terminal (Wire color)		Condition of ignition key cylinder	Voltage [V] (Approx.)
	(+)	(-)		
M91	25 (W/L)	Ground	Key is inserted.	Battery voltage
			Key is removed.	0

OK or NG

OK >> Key switch circuit is OK.
NG >> GO TO 2.

2. CHECK KEY SWITCH (INSERT)

1. Turn ignition switch OFF.
2. Disconnect key switch connector.
3. Check continuity between key switch terminals 1 and 2.

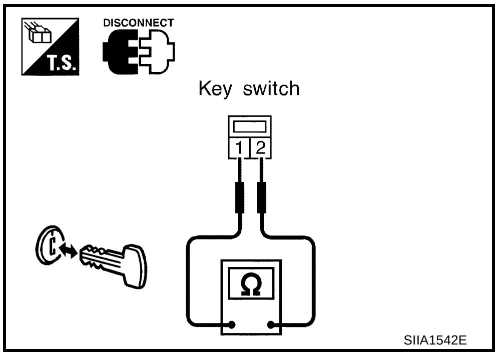

Terminals		Condition of ignition key cylinder	Continuity
1	2	Key is inserted	Yes
		Key is removed	No

OK or NG

OK >> Check the following.
- 10A fuse [No. 28, located in fuse block (J/B)]
- Harness for open or short between key switch and fuse
- Harness for open or short between smart entrance control unit and key switch

NG >> Replace key switch.

Hazard Reminder Check

AIS005Y2

1. CHECK HAZARD WARNING LAMP

Does hazard warning lamp flash with hazard switch?

YES or NO

YES >> GO TO 2.

NO >> Check hazard warning lamp circuit. Refer to LT-24, "TURN SIGNAL AND HAZARD WARNING LAMPS" .

2. CHECK HAZARD REMINDER OPERATION

1. Remove key from ignition key cylinder.
2. Check voltage between smart entrance control unit harness connector and ground.

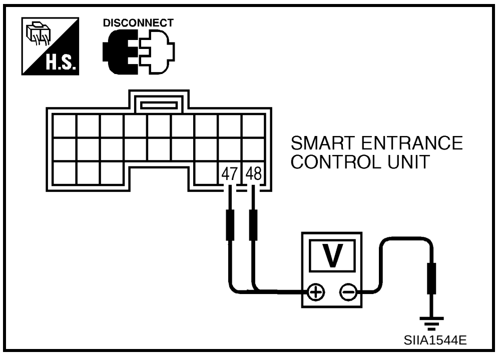

Connector	Terminals (Wire color)		Condition of key fob	Voltage [V] (Approx.)
	(+)	(–)		
M91	47 (G/B)	Ground	Lock button is pressed.	0→Battery voltage→0
			Unlock button is pressed.	0→Battery voltage→ 0→Battery voltage→0
	48 (G/Y)		Lock button is pressed.	0→Battery voltage→0
			Unlock button is pressed.	0→Battery voltage→ 0→Battery voltage→0

OK or NG

OK >> Check harness for open or short between smart entrance control unit and hazard switch.

NG >> Replace smart entrance control unit.

Horn Reminder Check

AIS005Y3

1. CHECK HORN

Does horn sound with horn switch?

YES or NO

YES >> GO TO 2.
NO >> Check horn circuit. Refer to WW-18, "HORN" .

2. CHECK HORN REMINDER OPERATION

1. Turn ignition switch OFF.
2. Disconnect smart entrance control unit connector.
3. Apply ground to smart entrance control unit harness connector M91 terminal 42(W/G).

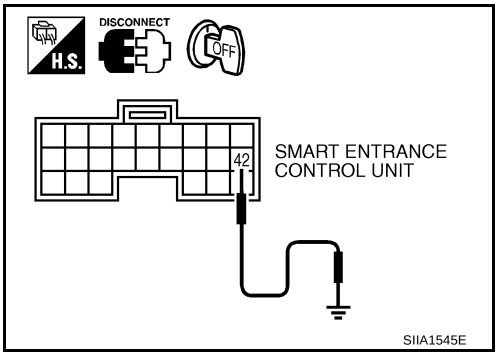

SIIA1545E

Does horn operate?

YES >> Replace smart entrance control unit.
NO >> Check harness for open between horn relay and smart entrance control unit.

Interior Room Lamp Operation Check

AIS005Y4

1. CHECK INTERIOR LAMP

Does interior room lamp illuminate with interior room lamp switch?

YES or NO

YES >> GO TO 2.
NO >> Check the following.

- Harness for open or short between smart entrance control unit and interior room lamp
- Interior room lamp

2. CHECK INTERIOR ROOM LAMP OPERATION

1. Remove key from ignition key cylinder.
2. Push unlock button of key fob with all doors closed and driver's door locked, and check voltage between smart entrance control unit harness connector and ground.

Connector	Terminal (Wire color)		Condition of key fob	Voltage [V] (Approx.)
	(+)	(–)		
M91	31 (R/Y)	Ground	Unlock button is pushed.	0 (For approx. 30 seconds.)
			Unlock button is not pushed.	Battery voltage

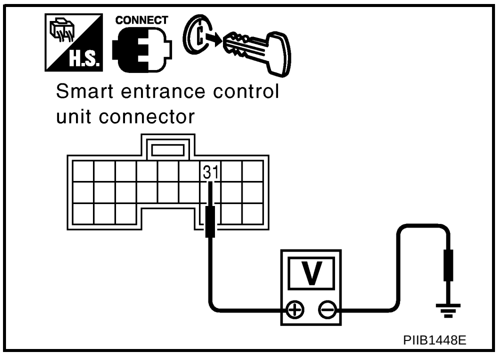

PIIB1448E

OK or NG

OK >> System is OK.
NG >> Check harness open or short between smart entrance control unit and interior room lamp.

ID Code Entry Procedure

AIS005Y5

KEY FOB ID SET UP

Close all doors.

↓

Insert key into and remove it from ignition key cylinder more than six times within 10 seconds. (Hazard warning lamps will then flash twice.)
NOTE
- **Withdraw key completely from ignition key cylinder each time.**
- **If procedure is performed too fast, system will not enter registration mode.**

↓

Insert key into ignition key cylinder and turn to ACC position.

↓

Push any button on key fob once. (Hazard warning lamps will then flash twice.)
At this time, the oldest ID code is erased and the new ID code is entered.

↓

Do you want to enter any additional key fob ID codes?
A maximum five ID codes can be entered. If more than five ID codes are entered, the oldest ID code will be erased.

No → Open driver side door. (END)

Yes ↓

ADDITIONAL ID CODE ENTRY
Unlock the door, then lock again with lock/unlock switch driver side (in power window main switch).
NOTE
Operate this procedure even if the door is in the state of the unlock.

↓

Push any button on key fob once. (Hazard warning lamp will then flash twice.)
At this time, The oldest ID code is erased and the new ID code is entered.

↓

A maximum five ID codes can be entered. If more than five ID codes are entered, the oldest ID code will be erased.
Do you want to enter any additional key fob ID codes?

No → Open driver side door. (END)

Yes ↓

ADDITIONAL ID CODE ENTRY
Unlock the door, then lock again with lock/unlock switch driver side (in power window main switch).

→ (return to "Push any button on key fob once.")

Open driver side door. (END)
After entering ID code, check operation of remote keyless entry system.

PIIA2839E

Key Fob Battery Replacement

AIS005Y6

NOTE:
- Be careful not to touch the circuit board or battery terminal.
- The key fob is water-resistant. However, if it does get wet, immediately wipe it dry.

1. Open the lid using a coin.
2. Remove the battery.
3. Install the new battery, positive side down.
4. Close the lid securely. Push the key fob buttons two or three times to check operation.

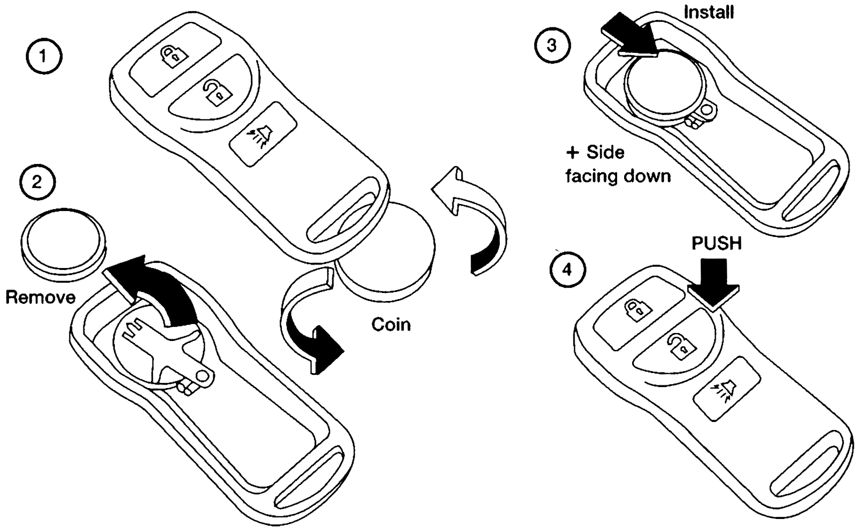

FRONT DOOR LOCK

PFP:80502

Component Parts Location

AIS005P1

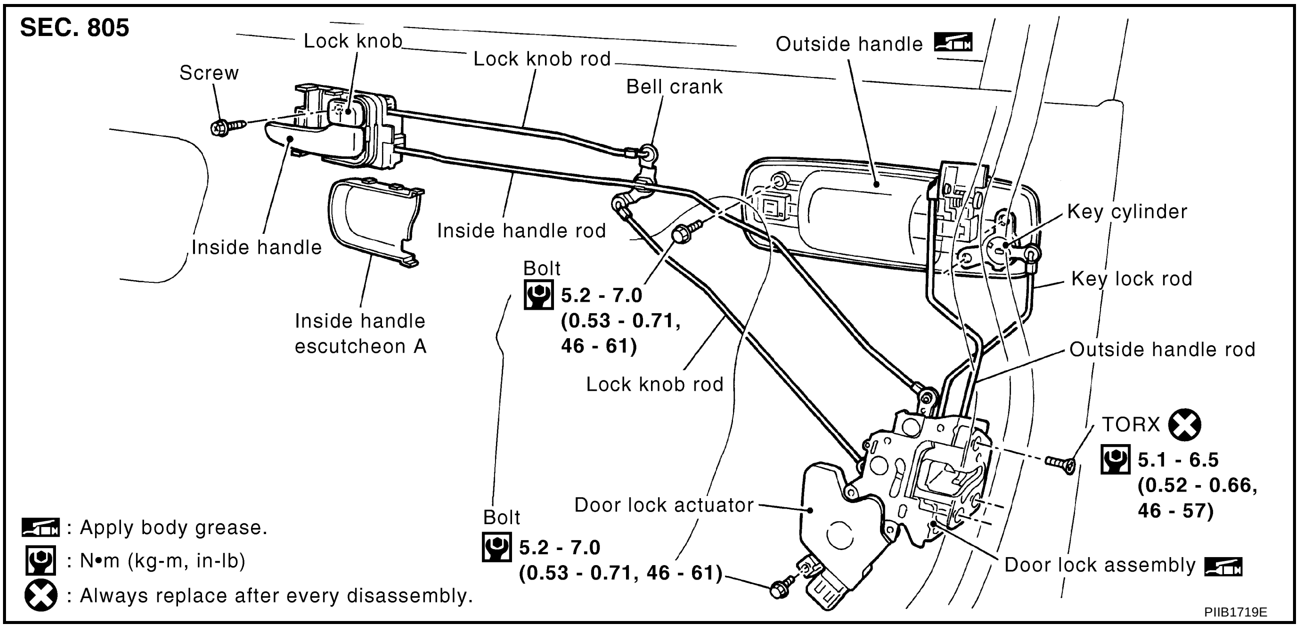

Inspection and Adjustment

AIS005P3

1. Remove door finisher. Refer to EI-32, "DOOR FINISHER" .
2. Remove sealing screen.

   NOTE:
   If sealing screen is reused, cut butyl tape in a way that leaves it on the sealing screen.

OUT SIDE HANDLE ROD ADJUSTMENT

- Rotate bushing to obtain the gap between bushing and rod (as shown in the figure).

NOTE:
The gap must not be 0 mm (0 in). The rod must not be held pressed against the bushing.

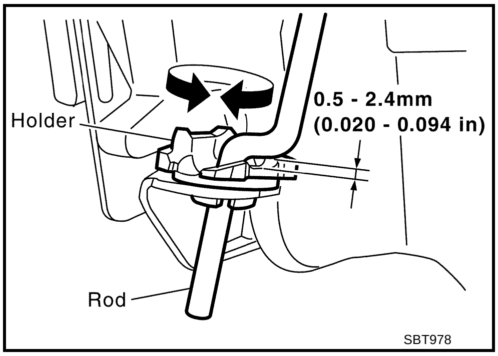

Removal and Installation

AIS005P4

REMOVAL

1. Remove door finisher. Refer to EI-32, "DOOR FINISHER" .
2. Remove sealing screen.

   NOTE:
   If sealing screen is reused, cut butyl tape in a way that leaves it on the sealing screen.
3. Remove front door glass. Refer to GW-56, "FRONT DOOR GLASS AND REGULATOR" .

4. Remove mount bolts and pull upper portion of the rear lower sash out of the sash.
5. Remove inside handle escutcheon A.

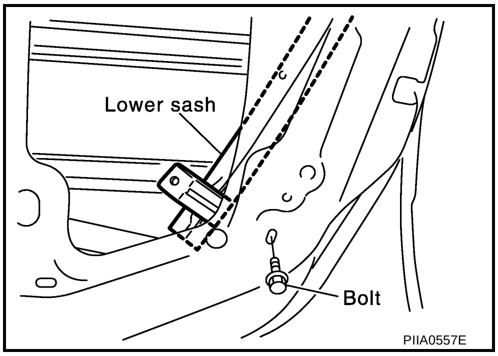

6. Remove inside handle mount screws.
7. Disconnect bell crank lock knob rod at the joints.
8. Disconnect inside handle rod (on the door lock assembly).
9. Slide inside handle rearward and remove it through the hole in the door panel.
10. Remove rod from the inside handle.
11. Working through the access hole, disconnect key cylinder rod and outside handle rod (on the handle) at the joint.

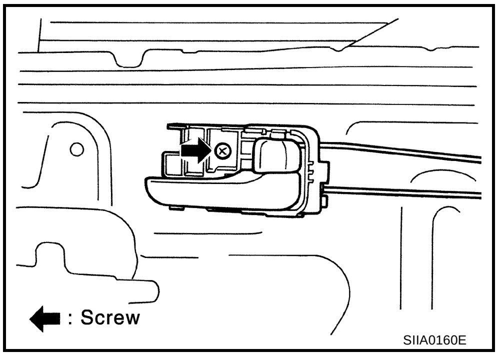

12. Disconnect door lock actuator connector.
13. Remove mount screw (TORX T30) and remove door lock assembly through the access hole.

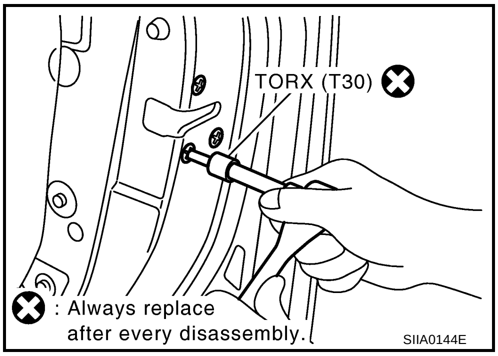

14. Remove outside handle mount bolts and slide the outside handle rearward to pull the front end of the outside handle escutcheon from the outer panel. Remove outside handle.

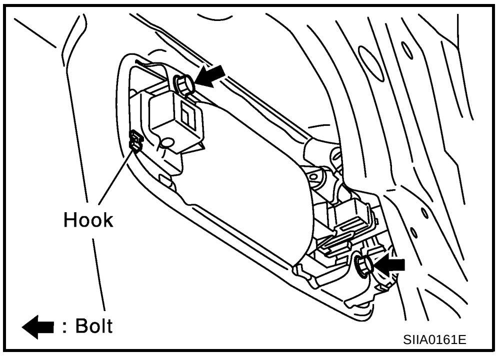

INSTALLATION

Install in the reverse order of removal.

NOTE:

- Install the outside handle by pressing it forward and downward while tightening the bolts.
- Install each rod by rotating the rod holder until it engages with a tactile feel.

Disassembly and Assembly

AIS005P5

DISASSEMBLY

NOTE:

The door lock actuator must be removed and installed with the door lock assembly off the vehicle.

1. Remove mount screws and door lock actuator from door lock assembly.
2. Pull the door lock actuator straight down to separate it from door lock assembly.

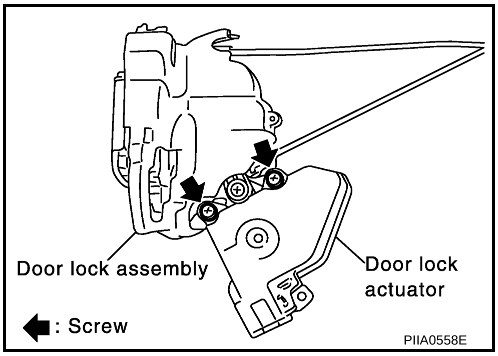

ASSEMBLY

1. Align door lock actuator pivot with the door lock assembly knob lever cutout.
2. Move the knob lever and door lock actuator pivot toward the LOCK position to ensure that they are securely engaged.

A B C D E F G H BL J K L M

REAR DOOR LOCK

PFP:82502

Component Parts Location

AIS005P7

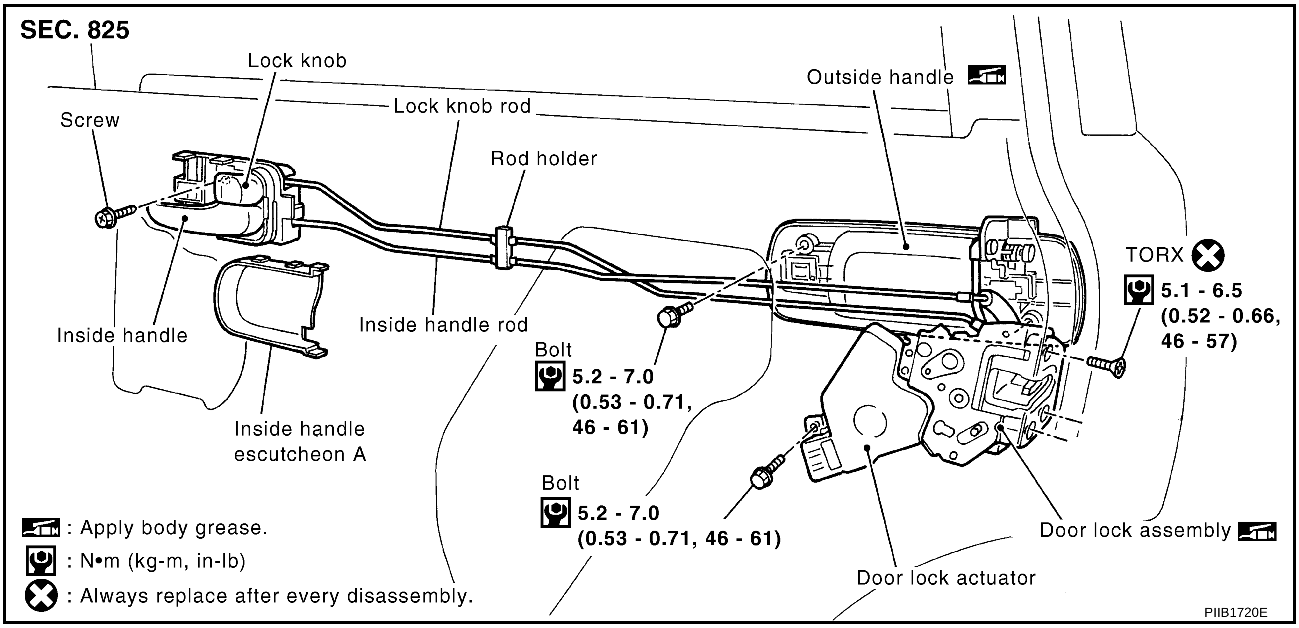

Inspection and Adjustment

AIS005P9

1. Remove rear door finisher. Refer to EI-32, "DOOR FINISHER" .
2. Remove sealing screen.

NOTE:
If sealing screen is reused, cut butyl tape in a way that leaves it on the sealing screen.

OUT SIDE HANDLE ROD ADJUSTMENT

Rotate bushing to obtain the gap between bushing and rod (as shown in the figure).

NOTE:
The gap must not be 0 mm (0 in). The rod must not be held pressed against the bushing.

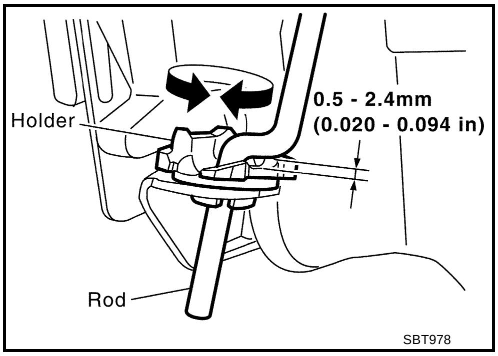

Removal and Installation

AIS005PA

REMOVAL

1. Remove rear door finisher. Refer to EI-32, "DOOR FINISHER" .
2. Remove sealing screen.

   NOTE:
   If sealing screen is reused, cut butyl tape in a way that leaves it on the sealing screen.
3. Remove rear lower sash. Refer to GW-59, "REAR DOOR GLASS AND REGULATOR" .
4. Remove rear door glass. Refer to GW-59, "REAR DOOR GLASS AND REGULATOR" .
5. Remove inside handle escutcheon A.

6. Remove inside handle mount screws.
7. Disconnect inside handle rod (on the door lock assembly).
8. Disconnect lock knob rod (on the door lock assembly).

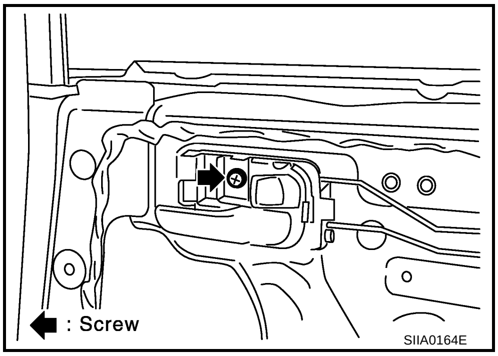

9. Pry rod holder off with a flat-bladed screwdriver to remove rod.
10. Slide inside handle rearward and remove it through the hole in the door panel.
11. Remove rod from the inside handle.
12. Disconnect door lock actuator connector.

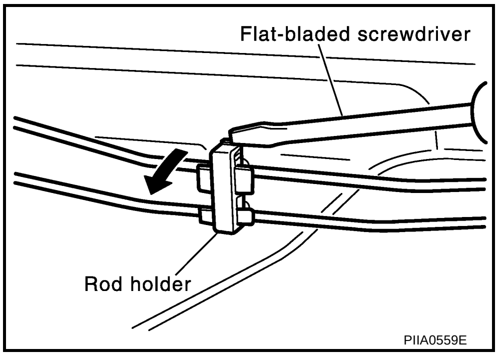

13. Remove mount screw (TORX T30) and remove door lock assembly through the access hole.

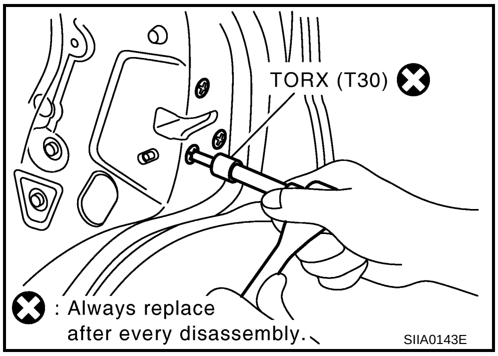

14. Remove outside handle mount bolts. Slide outside handle rearward to pull front end of the outside handle escutcheon from the outer panel. Remove outside handle.

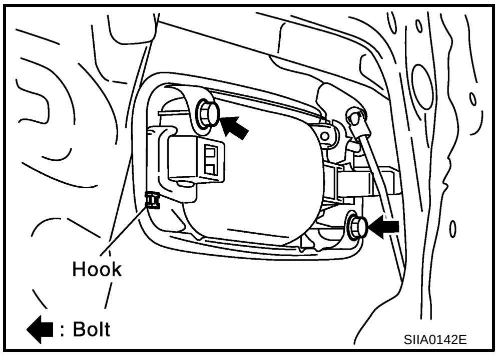

INSTALLATION

Install in the reverse order of removal.

NOTE:

- Install the outside handle by pressing it forward and downward while tightening the bolts.
- Install each rod by rotating the rod holder until it engages with a tactile feel.

Disassembly and Assembly

AIS005PB

DISASSEMBLY

NOTE:

The door lock actuator must be removed and installed with the door lock assembly off the vehicle.

1. Remove mount screws and door lock actuator from door lock assembly.
2. Pull the door lock actuator straight down to separate it from door lock assembly.

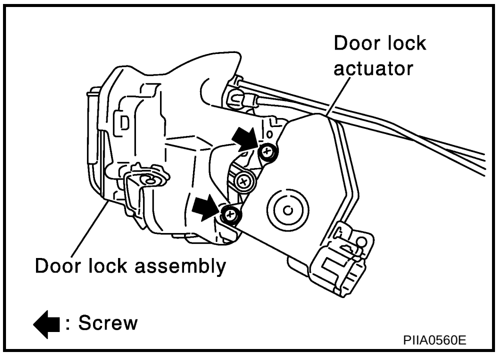

ASSEMBLY

1. Align door lock actuator pivot with the door lock assembly knob lever cutout.
2. Move the knob lever and door lock actuator pivot toward the LOCK position to ensure that they are securely engaged.

BACK DOOR

PFP:90100

Fitting Adjustment

AIS005PD

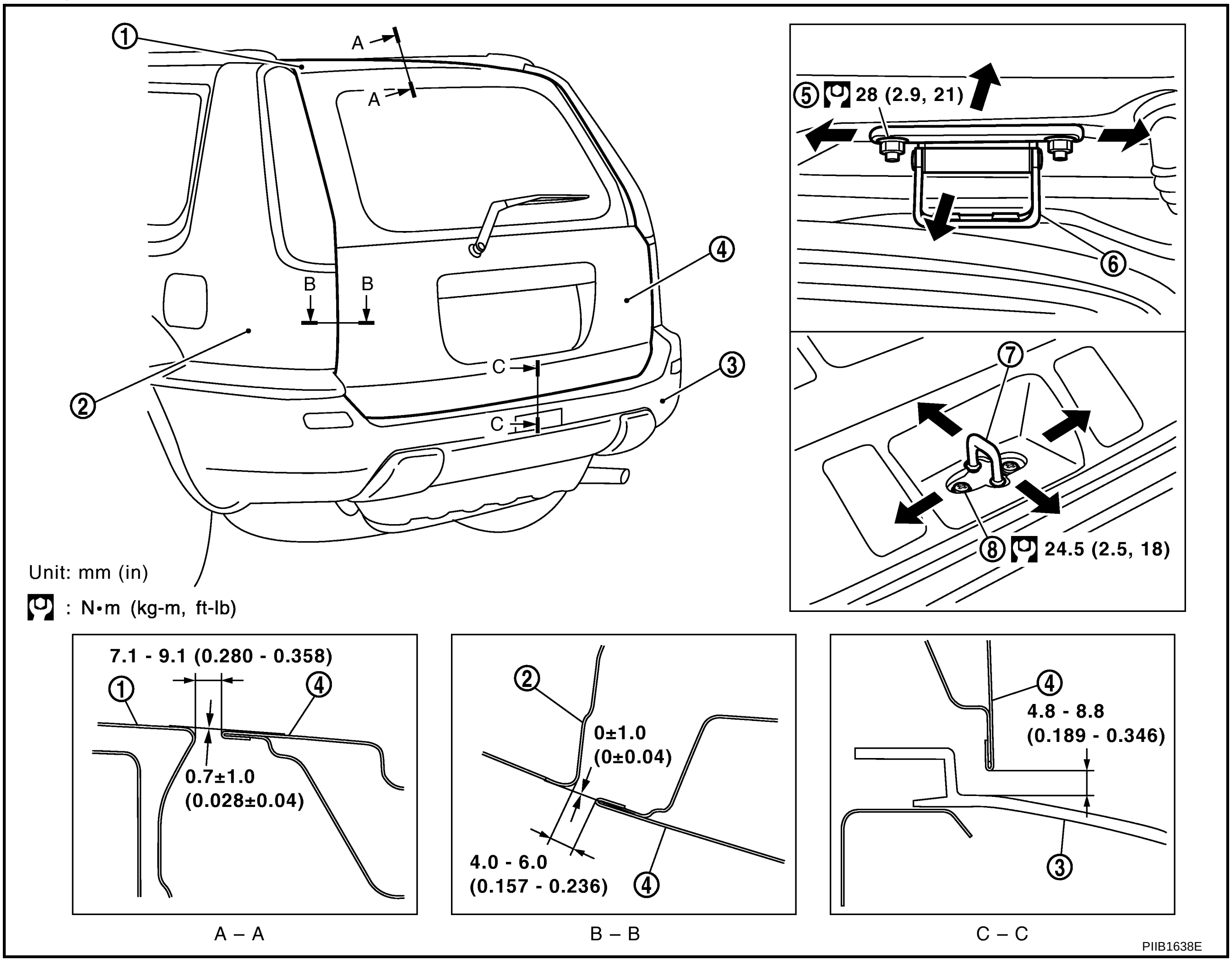

1.	Roof	2.	Rear fender	3.	Rear bumper
4.	Back door	5.	Nut	6.	back door hinge
7.	Striker	8.	Screw		

VERTICAL/LATERAL CLEARANCE ADJUSTMENT

1. With striker removed, loosen hinge mount nuts on the back door and close it.
2. Make lateral clearance and clearance to rear window glass equal. Open back door to tighten mounting bolts to specified torque.
3. If taking the steps above does not result in fine adjustment, remove headliner and loosen the hinge mount nuts on the vehicle for further adjustment.

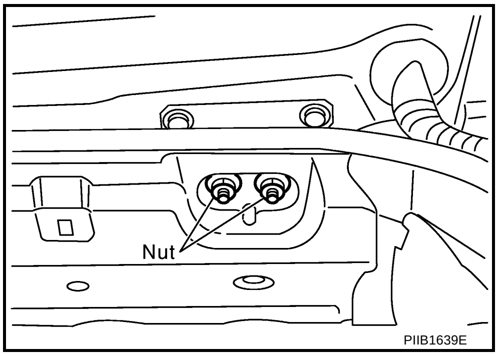

Back Door Assembly

AIS005PE

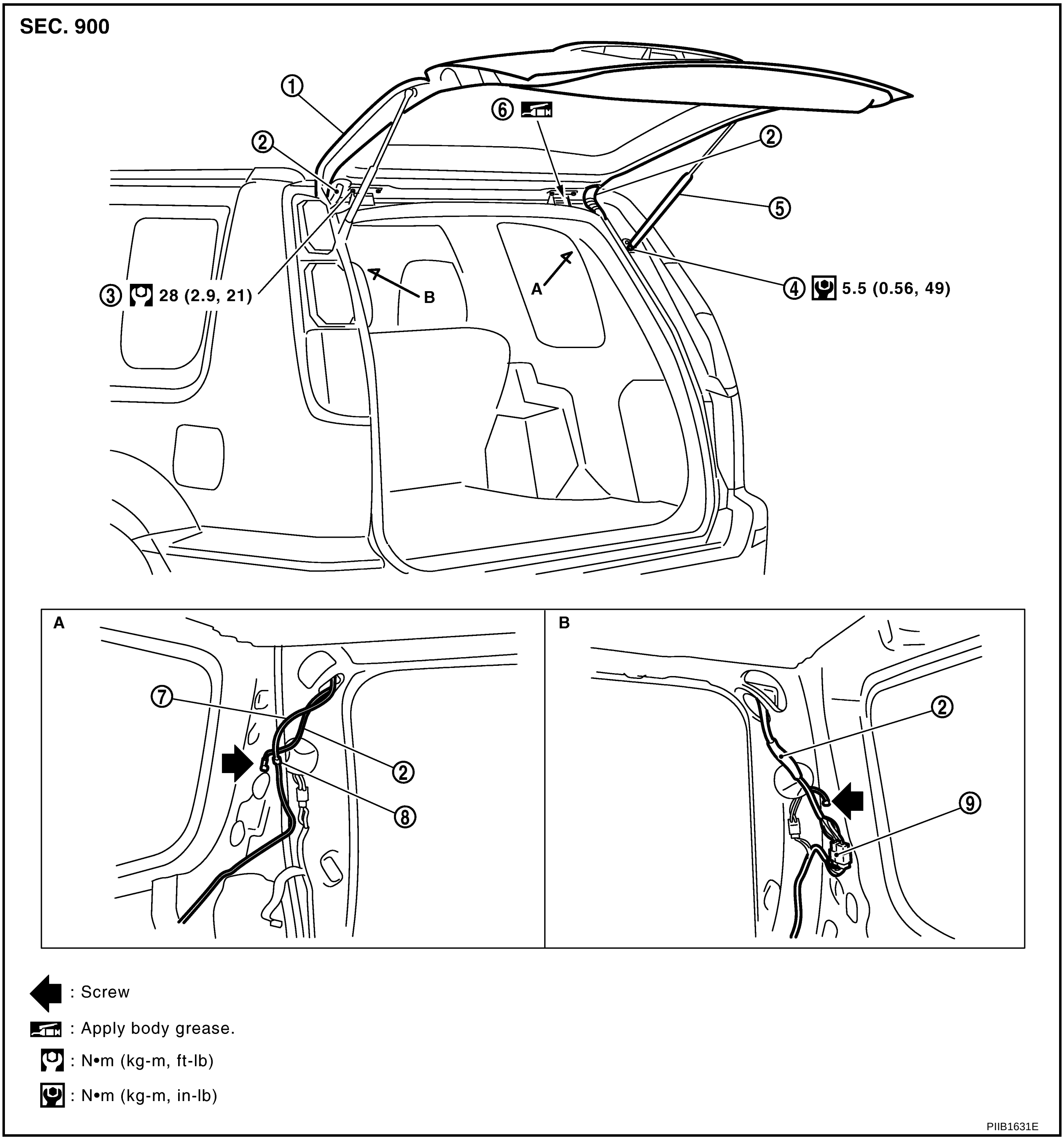

1.	Back door assembly	2.	Back door harness	3.	Nut
4.	Bolt	5.	Back door stay	6.	back door hinge
7.	Washer hose	8.	Washer hose connector	9.	Back door harness connector

REMOVAL AND INSTALLATION

Removal

1. Disconnect connectors in the back door and encamp the harness. Pull the harness out of the back door.
2. Support the back door lock with a proper material to prevent it from falling and remove back door stay (gas stay).
3. Remove hinge mount nuts on the back door and remove back door assembly.

Installation

Install in the reverse order of removal.

CAUTION:
- **Operate with two workers, because of its heavy weight.**
- **After installing, apply touch-up paint (the body color) onto the head of the hinge mounting bolts.**
- **After installing, check the back door adjustment. Refer to BL-71, "Fitting Adjustment" .**

INSPECTION

1. Check hinges for the following items
   - Abnormal noise or door closing and opening effort
   - Component wear or damage
2. Apply Body Grease to the rotating part of the hinge.

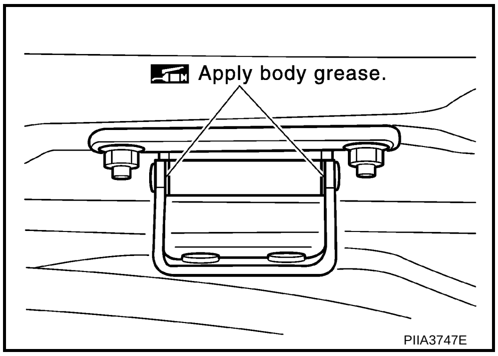

Removal and Installation of Back Door Handle

AIS005PF

REMOVAL

1. Remove back door trim. Refer to EI-35, "BACK DOOR TRIM" .
2. Remove license lamp finisher. Refer to EI-31, "LICENSE LAMP FINISHER" .
3. Remove cable clamp and remove cable from the back door handle.
4. Remove mount nuts and back door handle.

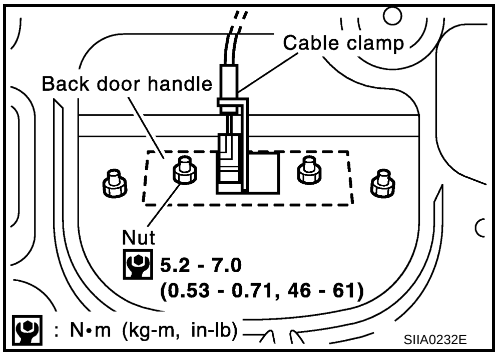

INSTALLATION

Install in the reverse order of removal.

Removal and Installation of Back Door Lock and Actuator

AIS005PG

REMOVAL

1. Remove back door trim. Refer to EI-35, "BACK DOOR TRIM" .
2. Disconnect back door lock & actuator connector.
3. Remove bolts from the back door lock and actuator and remove back door lock & actuator.

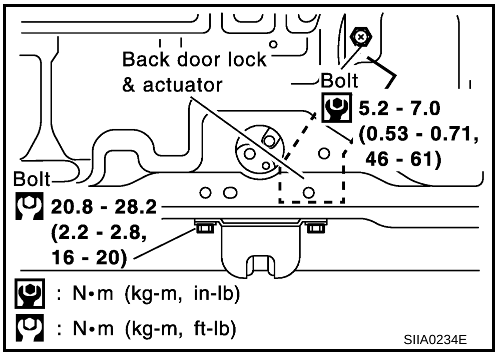

INSTALLATION

Install in the reverse order of removal.

Disassembly and Assembly of Back Door Lock & Back Door Lock Actuator

AIS0061K

DISASSEMBLY

CAUTION:

Be sure to remove or install the actuator with the Back door lock & back door lock actuator removed.

1. Remove the mounting screws, and remove the back door lock actuator from the back door lock.
2. Pull the back door lock actuator straight downward to separate it from the back door lock.

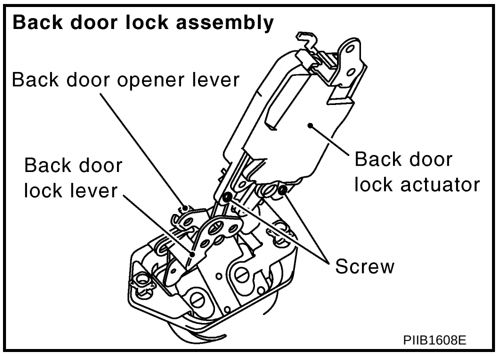

ASSEMBLY

1. Align the back door lock actuator pivot with the cutout on the knob lever of the, then assemble the actuator.
2. Move the knob lever and the back door lock actuator pivot toward the lock-on direction, and check that it engages securely.

Removal and Installation of Back Door Weatherstrip

AIS005PH

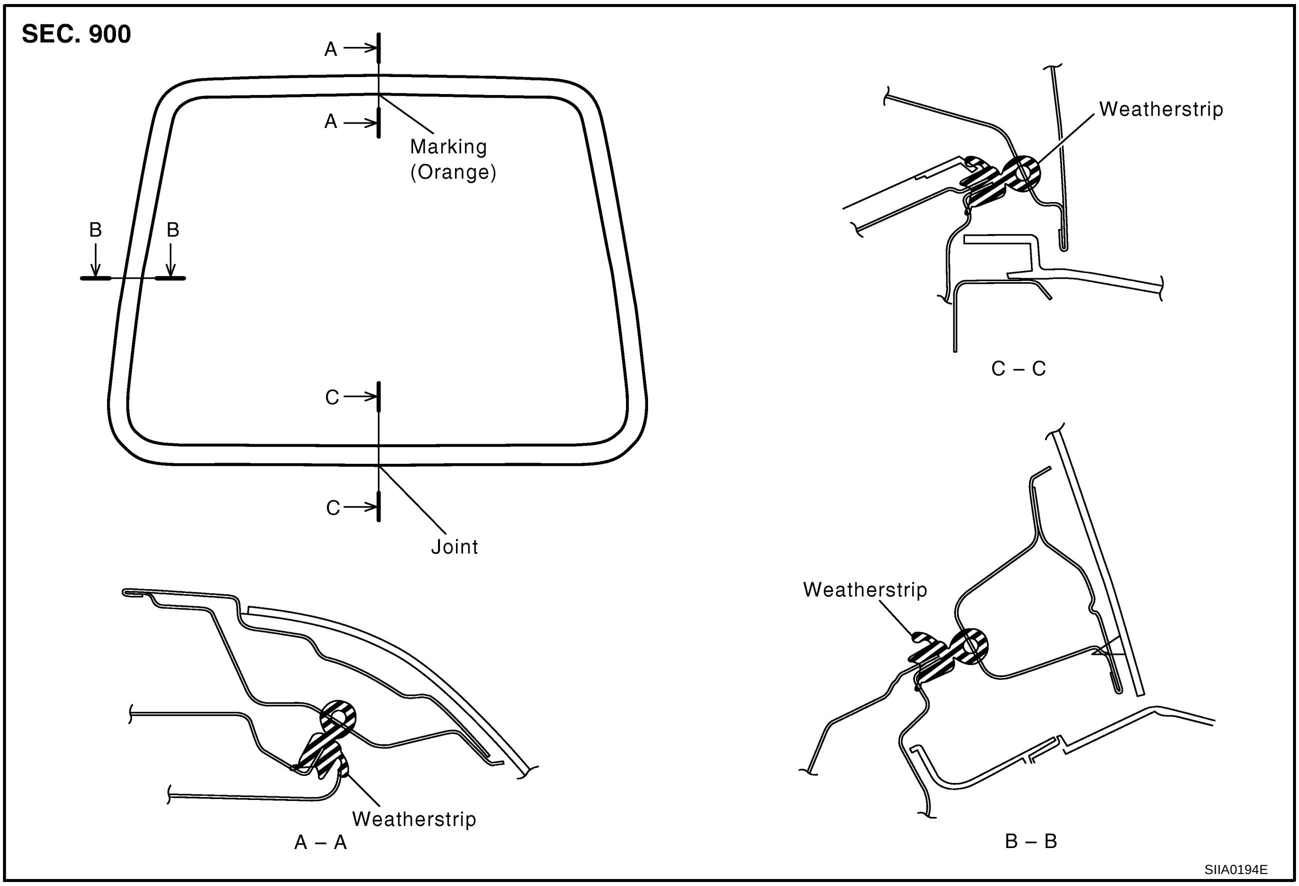

REMOVAL

Pull up and remove engagement with body from weatherstrip joint.

CAUTION:

After removal, do not pull strongly on the weatherstrip.

INSTALLATION

1. Working from the upper section, align weatherstrip mark with vehicle center position mark and install weatherstrip onto the vehicle.
2. For the lower section, align the weatherstrip seam with center of the striker.
3. After installation, pull the weatherstrip gently to ensure that there is no loose section.

   NOTE:

   Make sure the weatherstrip is fit tightly at each corner and back door rear plate.

FUEL FILLER LID OPENER

PFP:78820

Component Parts Location

AIS005PI

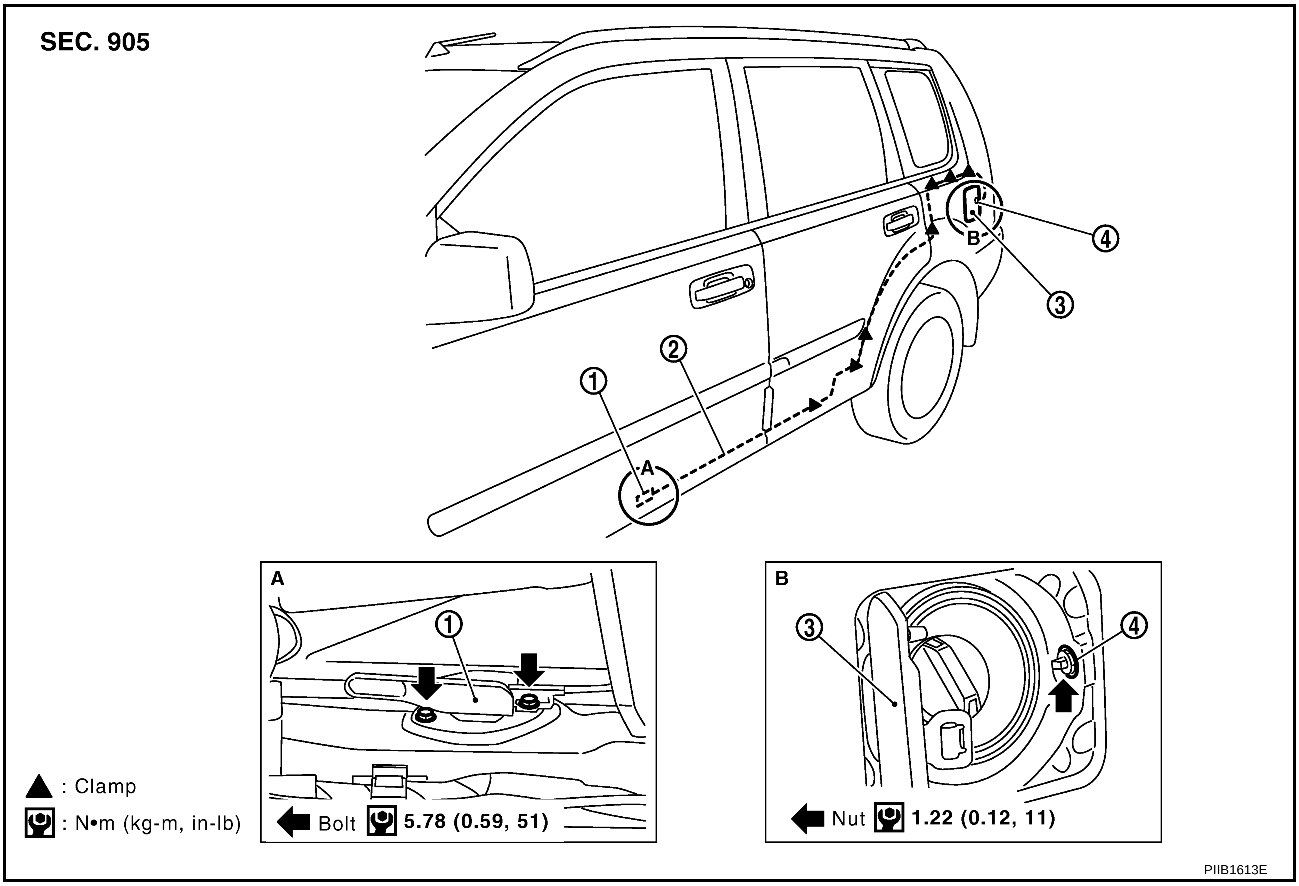

1. Fuel filler lid opener handle
2. Fuel filler lid opener cable
3. Fuel filler lid
4. Fuel filler lid lock

Removal and Installation of Fuel Filler Lid Opener Cable

AIS0061Y

REMOVAL

1. Remove luggage side lower finisher (LH), rear kicking plate (LH), center pillar lower garnish (LH) and front kicking plate (LH). Refer to EI-36, "BODY SIDE TRIM" .
2. Remove fuel filler lid lock mounting nut.
3. Remove fuel filler lid opener handle mounting bolts.
4. Disconnect each clamp of fuel filler lid opener cable.

INSTALLATION

1. Install in the reverse order of removal.
2. after installing, check the operation.

VEHICLE SECURITY (THEFT WARNING) SYSTEM

PFP:28491

Component Parts and Harness Connector Location

AIS0062U

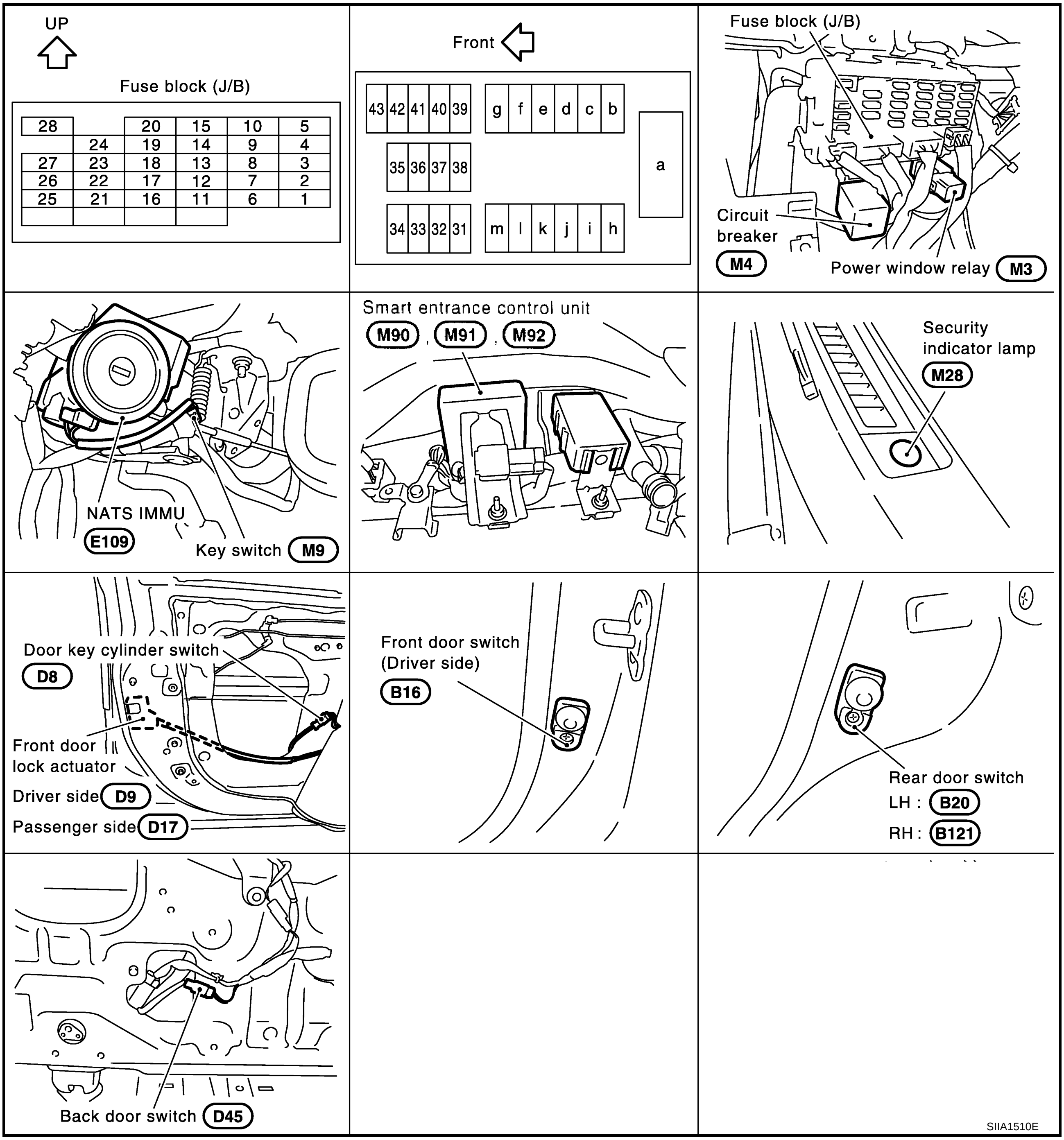

System Description

AIS0062V

DESCRIPTION

Operation Flow

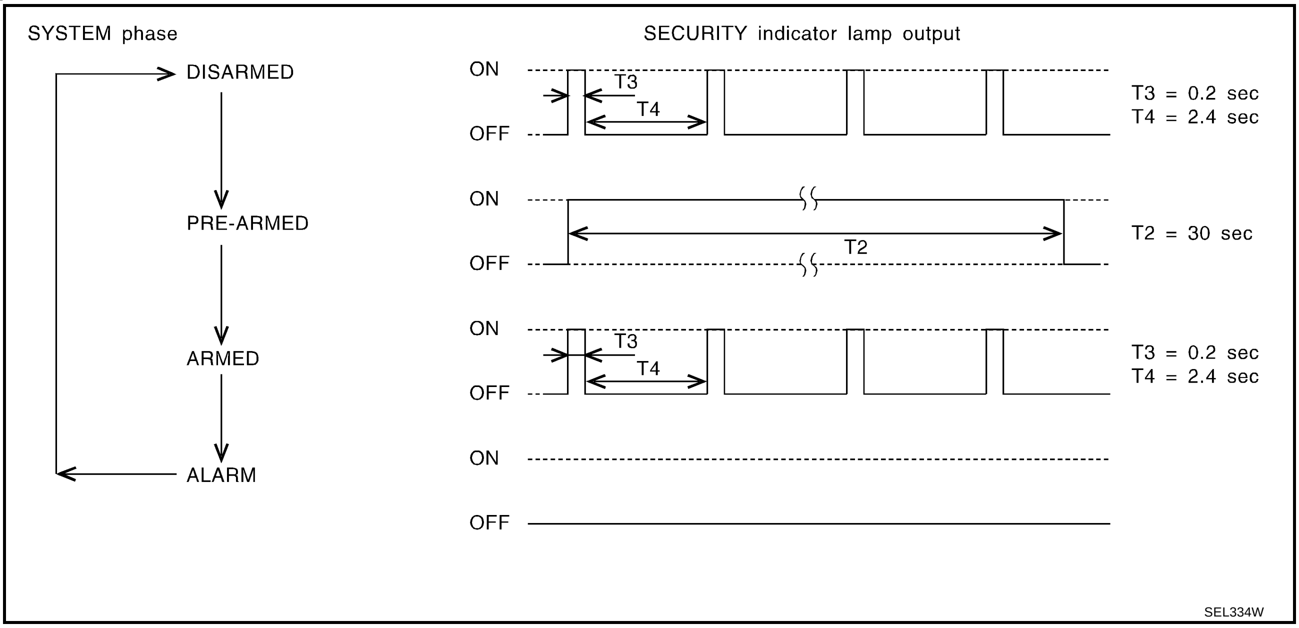

Setting the Theft Warning System

Initial condition

1. Ignition switch is in OFF position.

Disarmed phase

- When the theft warning system is in the disarmed phase, the security indicator lamp blinks every 2.4 seconds. (with NATS)
- When the theft warning system is in the disarmed phase and any door(s), hood or back door is opened, the security indicator lamp blinks every 0.5 second (without NATS)

Pre-armed phase and armed phase

When the following operation 1 or 2 is performed, the vehicle security system turns into the “pre-armed” phase. (The security indicator lamp illuminates.)

1. Smart entrance control unit receives LOCK signal from key cylinder switch or key fob after hood, and all doors are closed.
2. Hood and all doors are closed after front doors are locked by key, lock/unlock switch or key fob.

After about 30 seconds, the system automatically shifts into the “armed” phase (the system is set). (The security indicator lamp blinks every 2.4 seconds.)

Canceling the Set Theft Warning System

When the following 1 or 2 operation is performed, the armed phase is canceled.

1. Unlock the doors with the key or key fob.
2. Open the back door with the key.

Activating the Alarm Operation of the Theft Warning System

Make sure the system is in the armed phase. (The security indicator lamp blinks every 2.4 seconds.)
When the following operation 1 or 2 is performed, the system sounds the horns and flashes the hazard warning lamp about 50 seconds.

1. Engine hood, back door or any door is opened during armed phase.
2. Disconnecting and connecting the battery connector before canceling armed phase.

POWER SUPPLY AND GROUND

Power is supplied at all times

- through 40A fusible link (letter **B** , located in the fuse and fusible link box)
- to circuit breaker terminals 1 and 2
- to smart entrance control unit terminal 51,
- through 10A fuse [No. 26, located in the fuse block (J/B)]
- to smart entrance control unit terminal 49,
- through 10A fuse [No. 28, located in the fuse block (J/B)]
- to security indicator lamp terminal 1.

With the ignition switch in the ON or START position, power is supplied

- through 10A fuse [No. 5, located in the fuse block (J/B)]
- to smart entrance control unit terminal 27.

With the ignition switch in the ACC or ON position, power is supplied

- through 10A fuse [No. 4, located in the fuse block (J/B)]
- to smart entrance control unit terminal 26.

Ground is supplied

- to smart entrance control unit terminals 43 and 64
- through body grounds M27 and M70.

INITIAL CONDITION TO ACTIVATE THE SYSTEM

The operation of the theft warning system is controlled by the doors and hood.
To activate the theft warning system, the smart entrance control unit must receive signals indicating the doors and hood are closed.
When a door is open, smart entrance control unit terminal 1 or 2 receives a ground signal from each door switch.
When the hood is open, smart entrance control unit terminal 6 receives a ground signal

- to hood switch terminal 1 and 2
- through body grounds E24, E50.

When smart entrance control unit receives LOCK signal from key cylinder switch or key fob and none of the described conditions exist, the theft warning system will automatically shift to armed mode.

THEFT WARNING SYSTEM ACTIVATION

With all doors (including hood) close if the key is used to lock doors, smart entrance control unit terminal 11 receives a ground signal

- from the door key cylinder switch (Driver side) terminal 1, or
- from the door key cylinder switch (Passenger side) terminal 3
- through body grounds M27 and M70.

If this signal, or lock signal from key fob is received by the smart entrance control unit, the vehicle security system will activate automatically.

NOTE:
Theft warning system can be set even though all doors are not locked.
Once the vehicle security system has been activated, smart entrance control unit terminal 38 supplies ground to terminal 2 of the security indicator lamp.
The security lamp will illuminate for approximately 30 seconds and then blinks every 2.4 seconds.
Now the vehicle security system is in armed phase.

THEFT WARNING SYSTEM ALARM OPERATION

The theft warning system is triggered by

- opening a door
- opening the hood
- detection of battery disconnect and connect.

Once the vehicle security system is in armed phase, if the smart entrance control unit receives a ground signal at terminal 1 or 2 (door switch or hood switch), the vehicle security system will be triggered. The hazard lamp flashes, the horn sounds intermittently.

Power is supplied at all times

- through 10A fuse (No, 34 located in fuse and fusible link box)
- to horn relay terminal 2.

When the vehicle security system is triggered, ground is supplied intermittently

- to horn relay terminal 1
- through smart entrance control unit terminal 42.

When horn relay are energized, then power is supplied to horn.
The horn sounds intermittently.
The alarm automatically turns off after 50 seconds but will reactivate if the vehicle is tampered with again.

THEFT WARNING SYSTEM DEACTIVATION

To deactivate the theft warning system, a door must be unlocked with the key or key fob.
When the key is used to unlock the door, smart entrance control unit terminal 10 receives a ground signal

- from the door key cylinder switch (Driver side) terminal 3, or
- from the door key cylinder switch (Passenger side) terminal 1

When the smart entrance control unit receives either one of these signals or unlock signal from key fob, the theft warning system is deactivated. (Disarmed phase)

PANIC ALARM OPERATION

Multi-remote control system may or may not operate theft warning system (horn) as required.
When the multi-remote control system (panic alarm) is triggered, ground is supplied intermittently

- to horn relay terminal 1
- through smart entrance control unit terminal 42.

The horn sounds intermittently.
The alarm automatically turns off after 25 seconds or when smart entrance control unit receives any signal from key fob.

Schematic

AIS0062W

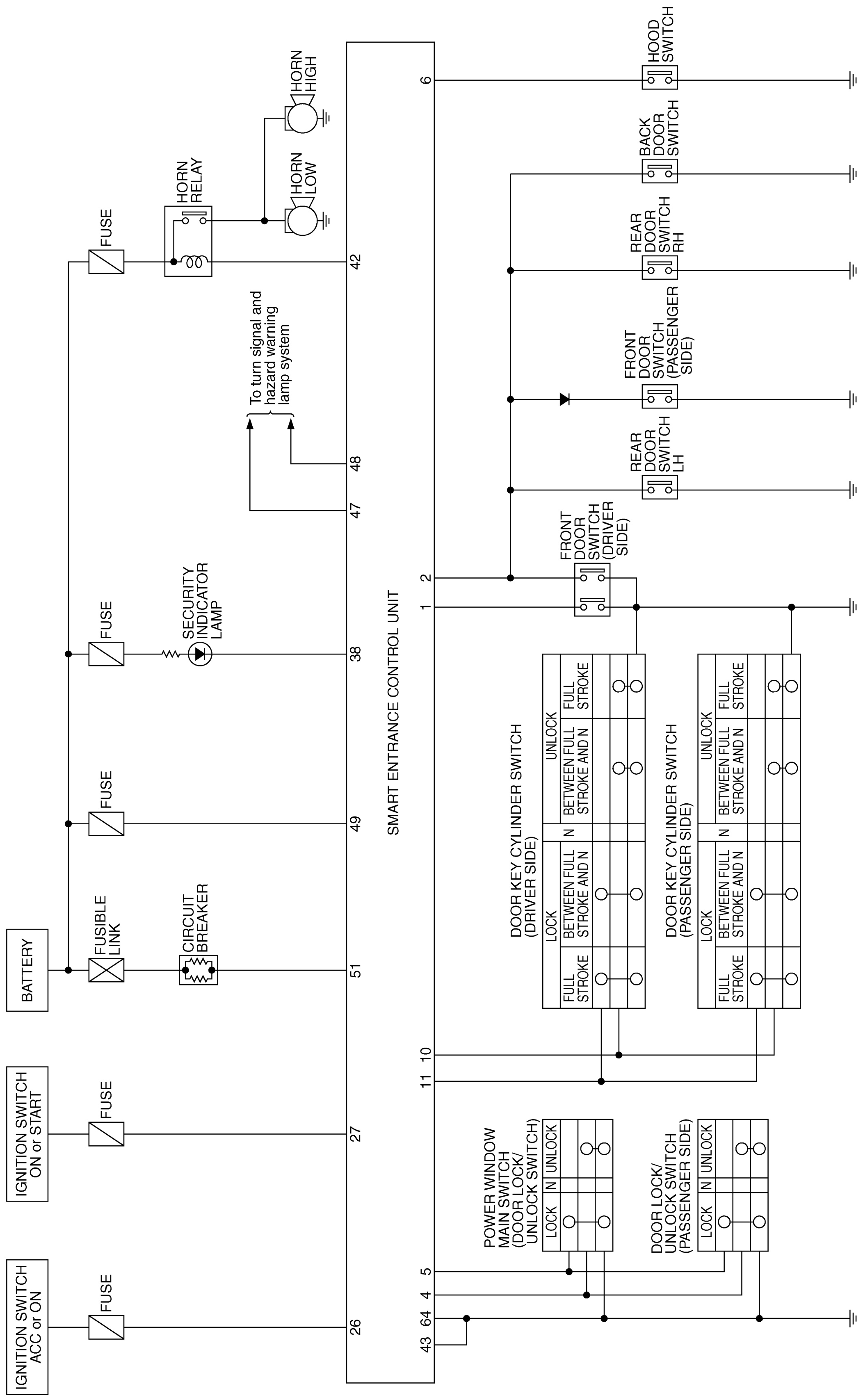

TIWB0055E

Wiring Diagram — VEHSEC —

AIS0062X

BL-VEHSEC-01

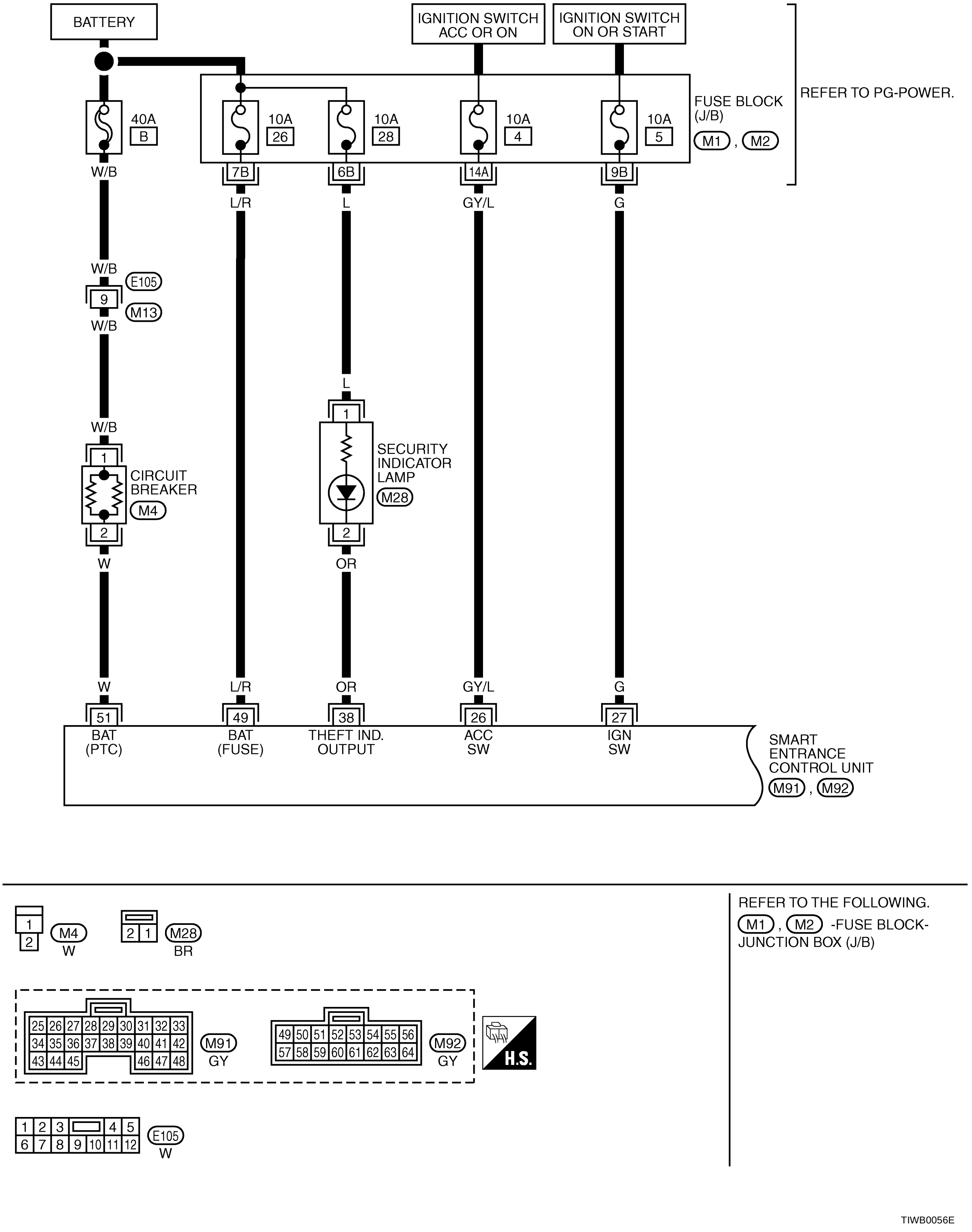

BL-VEHSEC-02

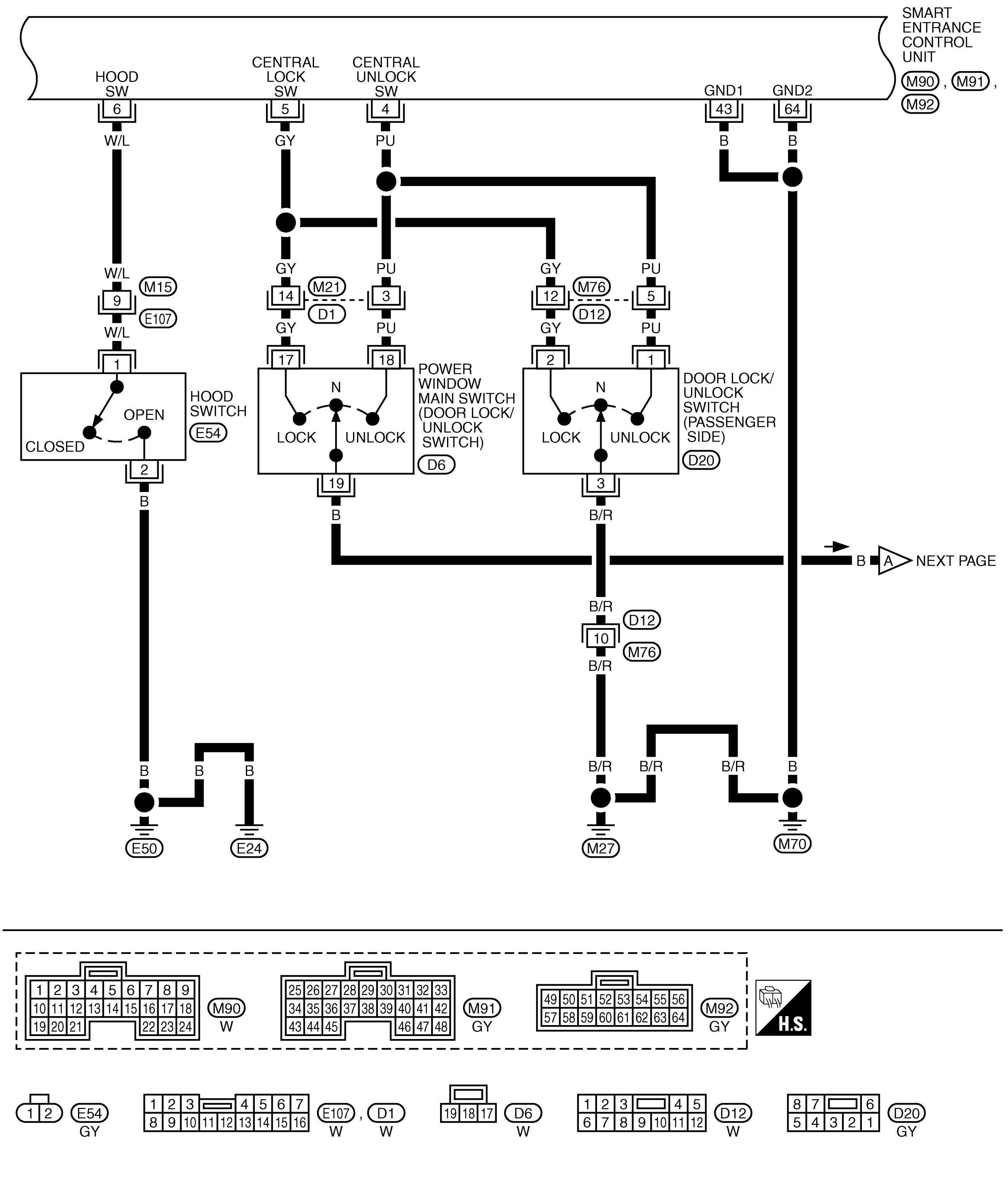

TIWB0057E

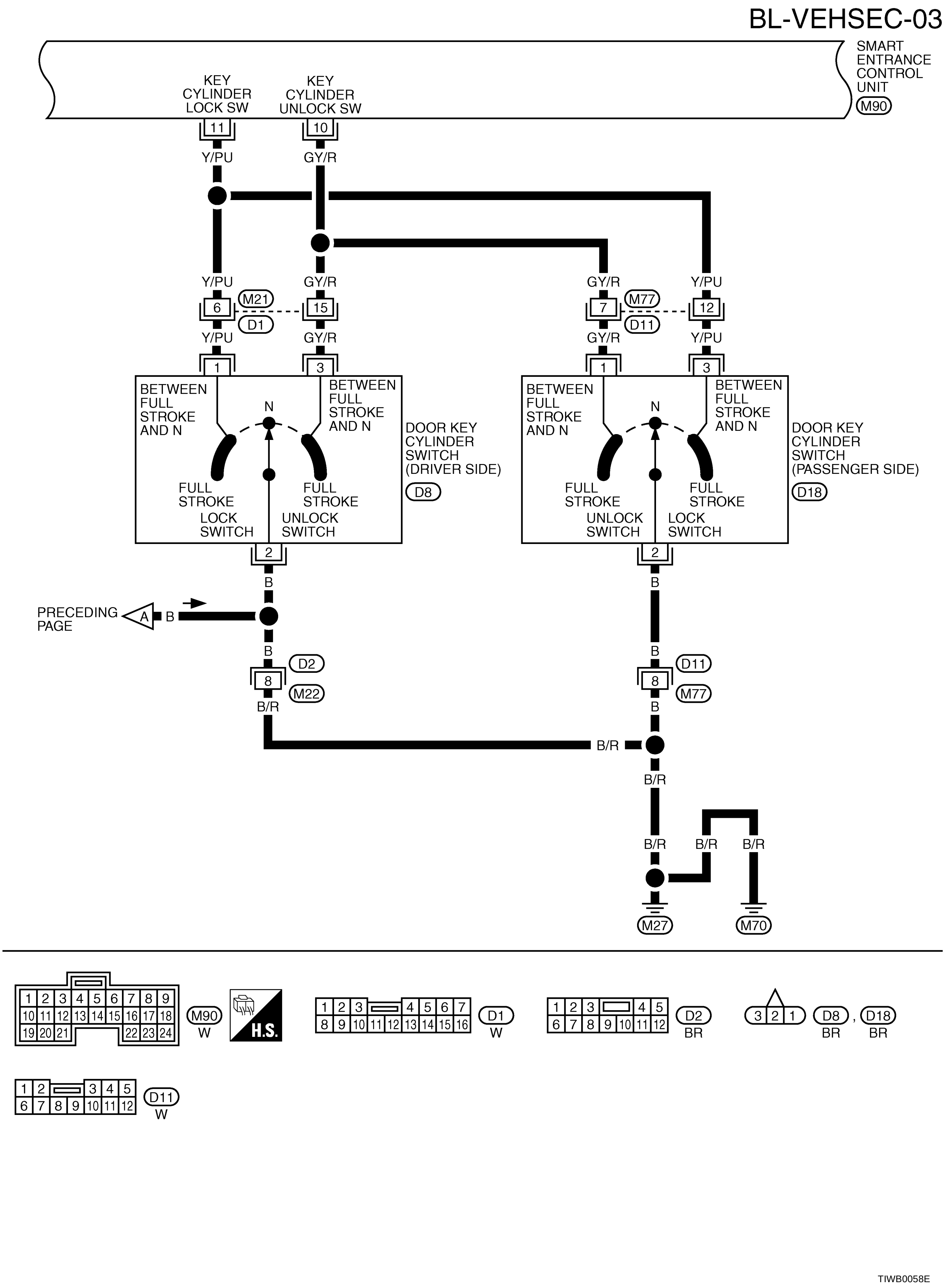
BL-VEHSEC-03
SMART ENTRANCE CONTROL UNIT
M90
KEY CYLINDER LOCK SW
KEY CYLINDER UNLOCK SW
11
10
Y/PU
GY/R
M21
D1
M77
D11
6
15
7
12
1
3
BETWEEN FULL STROKE AND N
N
FULL STROKE
LOCK SWITCH
UNLOCK SWITCH
DOOR KEY CYLINDER SWITCH (DRIVER SIDE)
D8
DOOR KEY CYLINDER SWITCH (PASSENGER SIDE)
D18
2
B
PRECEDING PAGE
A
D2
M22
8
B/R
M27
M70
H.S.
W
BR
TIWB0058E

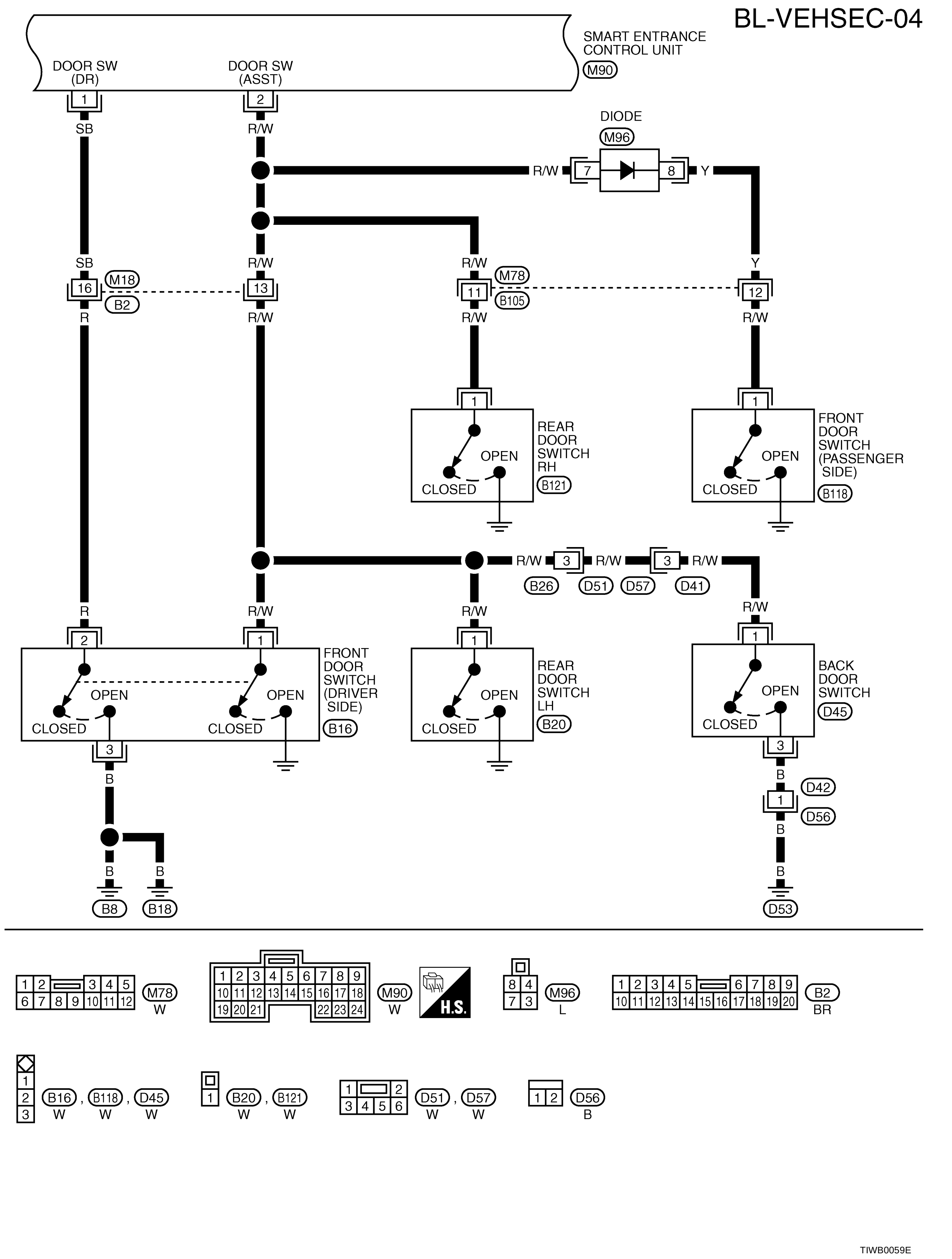
BL-VEHSEC-04
SMART ENTRANCE CONTROL UNIT
M90
DOOR SW (DR)
DOOR SW (ASST)
DIODE
M96
SB
R/W
Y
R
M18
B2
M78
B105
REAR DOOR SWITCH RH
B121
FRONT DOOR SWITCH (PASSENGER SIDE)
B118
OPEN
CLOSED
B26
D51
D57
D41
FRONT DOOR SWITCH (DRIVER SIDE)
B16
REAR DOOR SWITCH LH
B20
BACK DOOR SWITCH
D45
D42
D56
B
B8
B18
D53
M78 W
M90 W
H.S.
M96 L
B2 BR
B16, B118, D45 W W W
B20, B121 W W
D51, D57 W W
D56 B
TIWB0059E

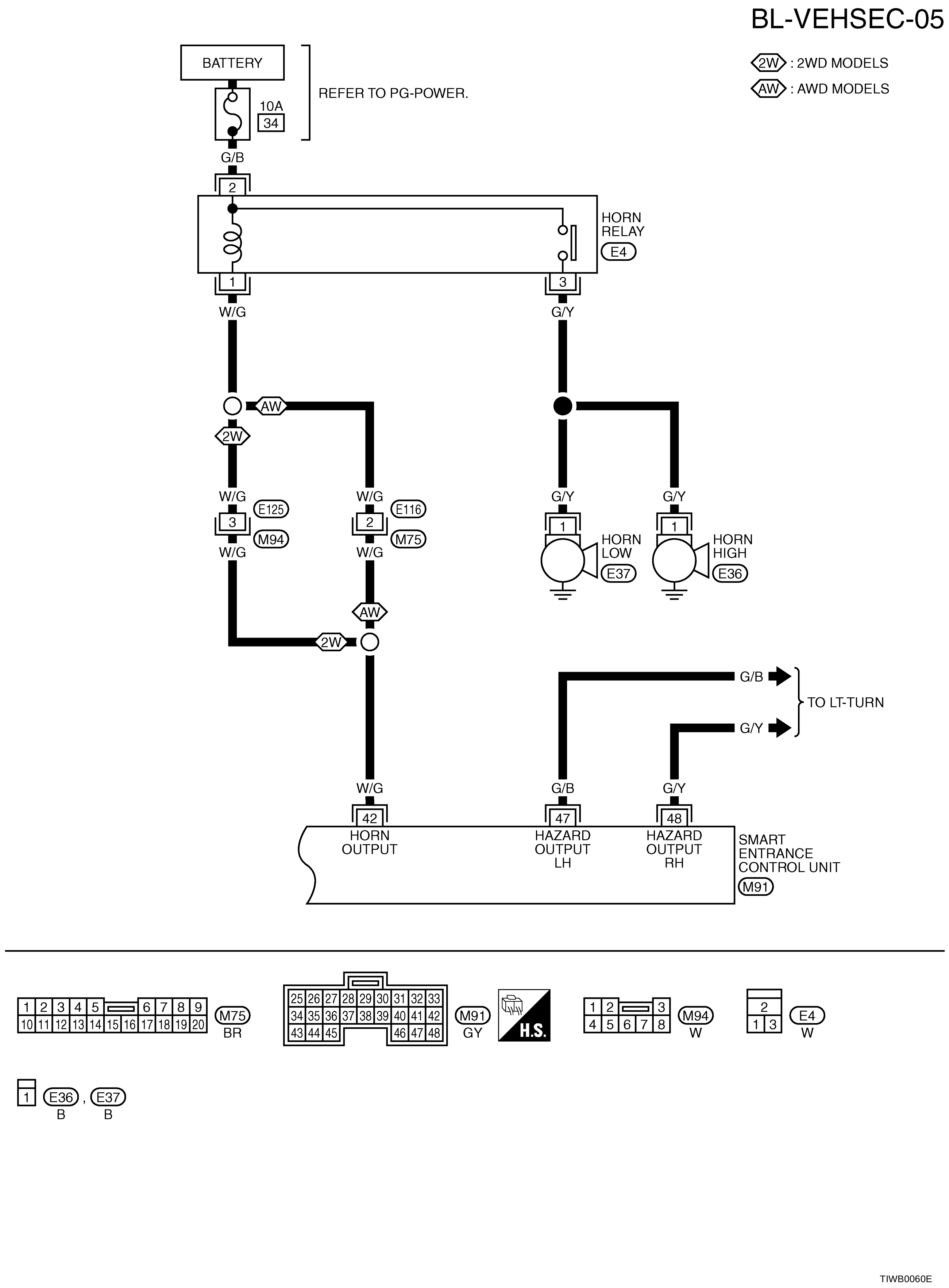
BL-VEHSEC-05
2W : 2WD MODELS
AW : AWD MODELS
BATTERY
10A
34
REFER TO PG-POWER.
G/B
2
HORN
RELAY
E4
1
3
W/G
G/Y
AW
2W
E125
E116
M94
M75
HORN
LOW
E37
HORN
HIGH
E36
G/B
G/Y
TO LT-TURN
42
47
48
HORN
OUTPUT
HAZARD
OUTPUT
LH
HAZARD
OUTPUT
RH
SMART
ENTRANCE
CONTROL UNIT
M91
M75
BR
M91
GY
H.S.
M94
W
E4
W
E36
B
E37
B
TIWB0060E

Terminals and Reference Value for Smart Entrance Control Unit

AIS0063I

TERMINAL	WIRE COLOR	ITEM	CONDITION	VOLTAGE [V] (Approx.)
1	SB	Door switch (Driver side)	ON (Door is opened) → OFF (Door is closed)	0 → 5
2	R/W	All door switch signal	ON (Door is opened) → OFF (Door is closed)	0 → 5
4	PU	Power door lock switch unlock signal	Unlock operation (ON)	0
			Other than above (OFF)	5
5	GY	Power door lock switch lock signal	Lock operation (ON)	0
			Other than above (OFF)	5
6	W/L	Hood switch signal	ON (Hood is opened) → OFF (Hood is closed)	0 → 5
10	GY/R	Door key cylinder unlock switch signal	OFF (Neutral) → ON (Unlocked)	5 → 0
11	Y/PU	Door key cylinder lock switch signal	OFF (Neutral) → ON (Locked)	5 → 0
26	GY/L	Ignition switch (ACC)	Ignition switch (ACC or ON position)	Battery voltage
27	G	Ignition switch (ON)	Ignition switch (ON or START position)	Battery voltage
38	OR	Security indicator lamp	Goes off → Illuminates	Battery voltage → 0
42	W/G	Horn relay	When panic alarm is operated using remote controller (ON → OFF)	0 → Battery voltage
43	B	Ground	—	0
49	L/R	Power source (Fuse)	—	Battery voltage
51	W	Power source (PTC)	—	Battery voltage
64	B	Ground	—	0

Preliminary Check

AIS0062Y

The system operation is canceled by turning ignition switch to “ACC” at any step between START and ARMED in the following flow chart.

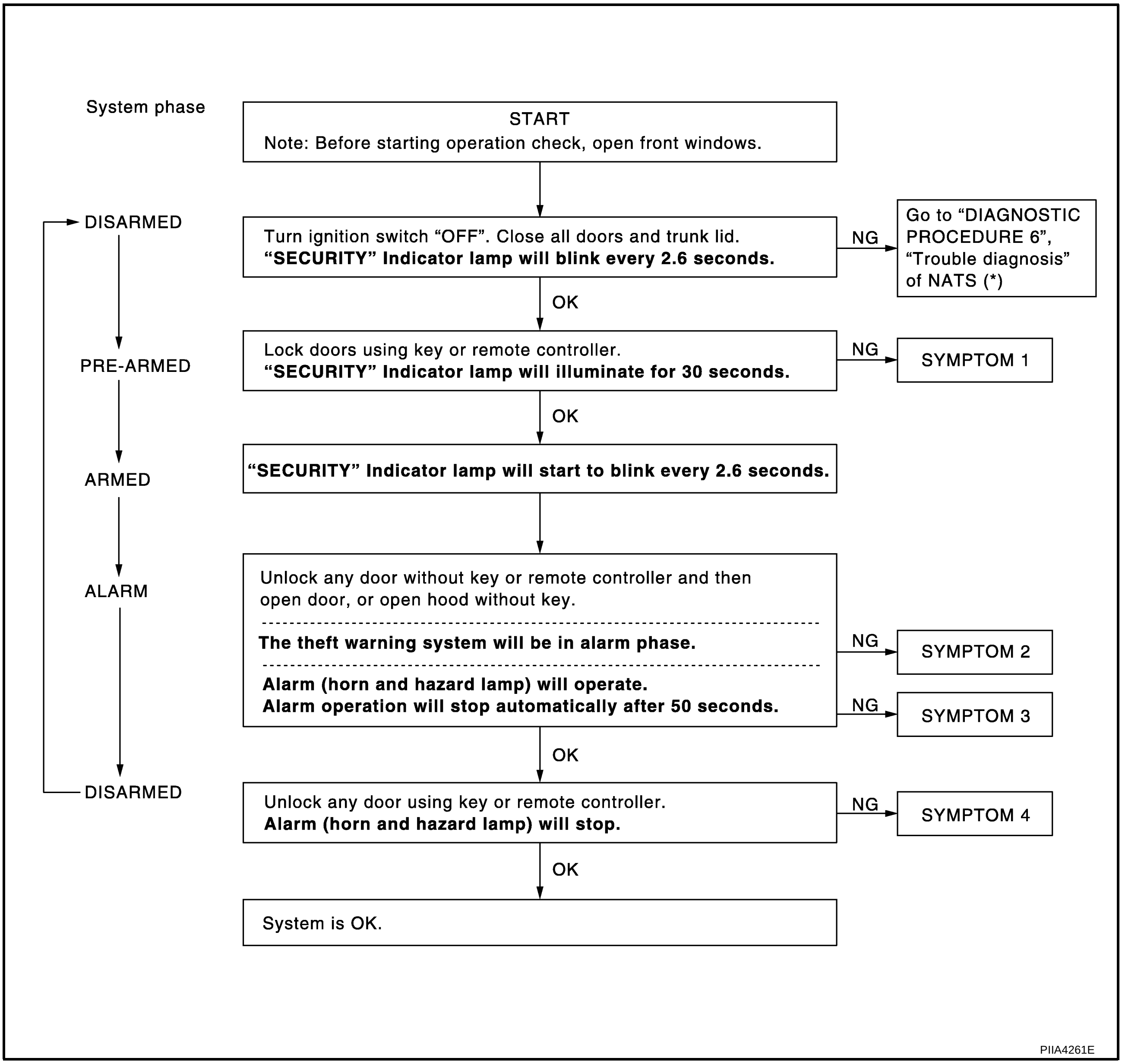

After performing preliminary check, go to symptom chart. Refer to BL-88, "Symptom Chart".

Symptom Chart

AIS0062Z

PROCEDURE / SYMPTOM			Diagnostic procedure	Reference page
1	Vehicle security system cannot be set by ····	All items	Diagnostic Procedure 1 (Power supply and ground circuit check)	BL-89
			Diagnostic Procedure 2 (Driver door switch circuit check)	BL-90
			Diagnostic Procedure 3 (All door switch circuit check)	BL-90
			Diagnostic Procedure 4 (Hood switch circuit check)	BL-91
			If the above systems are “OK”, replace smart entrance control unit.	—
		Door outside key	Diagnostic Procedure 5 (Door key cylinder switch circuit check)	BL-92
			If the above systems are “OK”, replace smart entrance control unit.	—
		Key fob	Check “MULTI-REMOTE CONTROL” system.	BL-45
	Security indicator does not turn “ON”.		Diagnostic Procedure 6 (Security indicator lamp circuit check)	BL-94
			If the above systems are “OK”, replace smart entrance control unit.	—
2	*1 Vehicle security system does not alarm when ····	Any door is opened.	Diagnostic Procedure 2 (Driver door switch circuit check)	BL-90
			Diagnostic Procedure 3 (All door switch circuit check)	BL-90
			Diagnostic Procedure 4 (Hood switch circuit check)	BL-91
			If the above systems are “OK”, replace smart entrance control unit.	—
3	Vehicle security alarm does not activate.	Horn alarm	Diagnostic Procedure 7 (Theft warning horn circuit check)	BL-94
			If the above systems are “OK”, check horn system.	WW-18
		Hazard lamp alarm	Diagnostic Procedure 8 (Hazard lamp circuit check)	BL-96
			If the above systems are “OK”, replace smart entrance control unit.	—
4	Vehicle security system cannot be canceled by ····	Door outside key	Diagnostic Procedure 5 (Door key cylinder switch circuit check)	BL-92
			If the above systems are “OK”, replace smart entrance control unit.	—
		Key fob	Check “MULTI-REMOTE CONTROL” system.	BL-45

*1: Make sure the system is in the armed phase.

Diagnostic Procedure 1

AIS00630

Power Supply and Ground Circuit Check

1. CHECK POWER SUPPLY CIRCUIT

1. Turn ignition switch OFF.
2. Disconnect smart entrance control unit connector.
3. Check voltage between smart entrance control unit harness connector and ground.

Connector	Terminals (wire color)		Ignition switch position		
	(+)	(–)	OFF	ACC	ON
M91	26 (GY/L)	Ground	0V	Battery voltage	Battery voltage
M92	49 (L/R)	Ground	Battery voltage	Battery voltage	Battery voltage
M92	51 (W)	Ground	Battery voltage	Battery voltage	Battery voltage

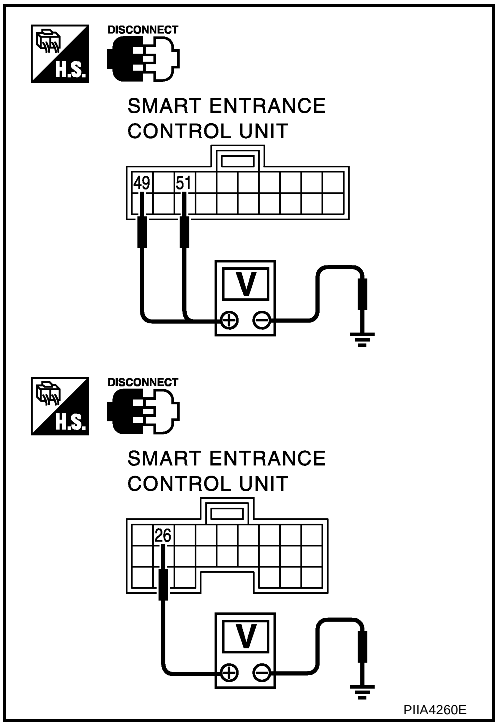

OK or NG

OK >> GO TO 2.

NG >> Check smart entrance control unit power supply circuit for open or short.

2. CHECK GROUND CIRCUIT

Check continuity between smart entrance control unit harness connector M91, M92 terminal 43, 64 and ground.

43 (B) – Ground : Continuity should exit.

64 (B) – Ground : Continuity should exit.

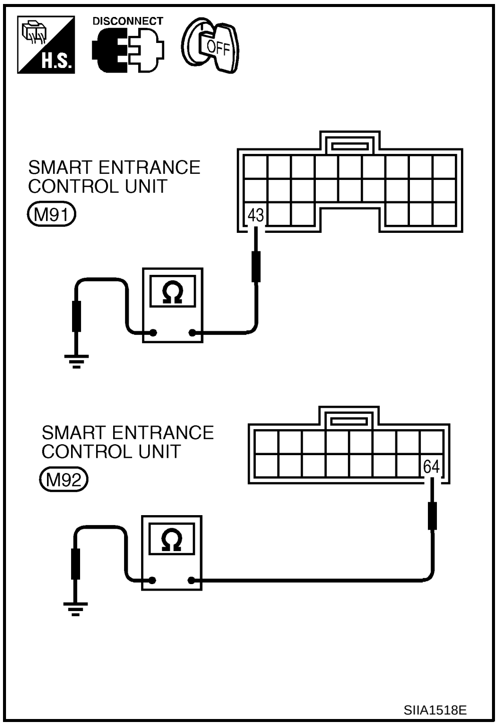

OK or NG

OK >> Power supply and ground circuit is OK.

NG >> Check smart entrance control unit ground circuit for open or short.

Diagnostic Procedure 2

AIS00631

Front Door Switch (Driver side) Circuit Check

1. CHECK DOOR SWITCH INPUT SIGNAL

1. Turn ignition switch OFF.
2. Check voltage between smart entrance control unit harness connector and ground.

Connector	Terminals (wire color)		Condition of front door (Driver side)	Voltage [V] (Approx.)
	(+)	(–)		
M90	1 (SB)	Ground	Closed	5
			Open	0

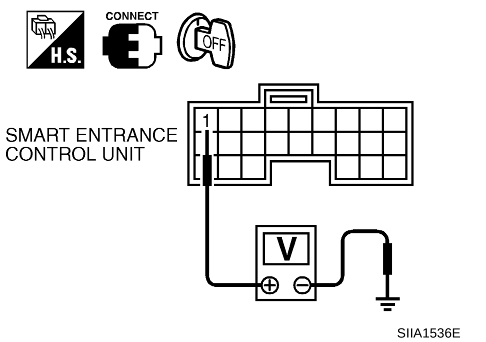

SIIA1536E

OK or NG

OK >> Front door switch (driver side) is OK.
NG >> GO TO 2.

2. CHECK DOOR SWITCH

1. Disconnect front door switch (driver side) harness connector.
2. Check continuity between front door switch (driver side) terminals 2 and 3.

Terminals		Condition of front door switch (Driver side)	Continuity
2	3	Pushed	No
		Released	Yes

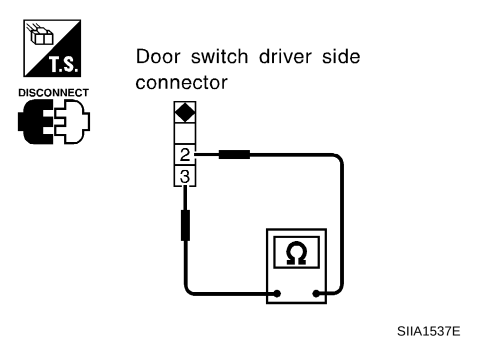

SIIA1537E

OK or NG

OK >> Check the following.
- Door switch ground circuit or front door switch (driver side) ground condition
- Harness for open or short between smart entrance control unit and front door switch (driver side)

NG >> Replace front door switch (driver side).

Diagnostic Procedure 3

AIS00632

All Door Switch Circuit Check

1. CHECK DOOR SWITCH INPUT SIGNAL

1. Turn ignition switch OFF.
2. Check voltage between smart entrance control unit connector and ground.

connector	Terminals (wire color)		Condition of door	Voltage [V] (Approx.)
	(+)	(–)		
M90	2 (R/W)	Ground	Closed	5
			Open	0

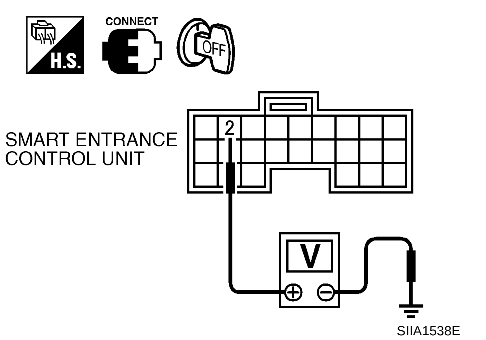

SIIA1538E

OK or NG

OK >> Door switch is OK.
NG >> GO TO 2.

2. CHECK DOOR SWITCH

Front door and rear door

1. Disconnect door switch harness connector.
2. Check continuity between door switch terminal 1 and ground.

Terminal		Condition of door switch	Continuity
1	Ground parts of door switch	Pushed	No
		Released	Yes

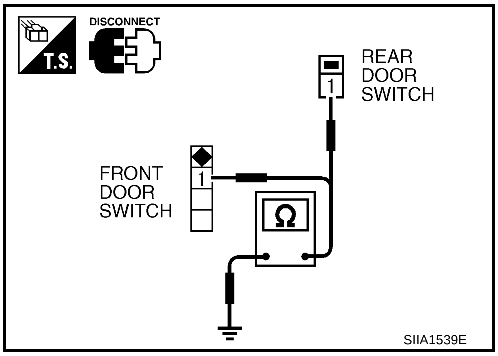

SIIA1539E

Back door

1. Disconnect door switch harness connector.
2. Check continuity between door switch terminals 1 and 3.

Terminal		Condition of back door switch	Continuity
1	3	Pushed	No
		Released	Yes

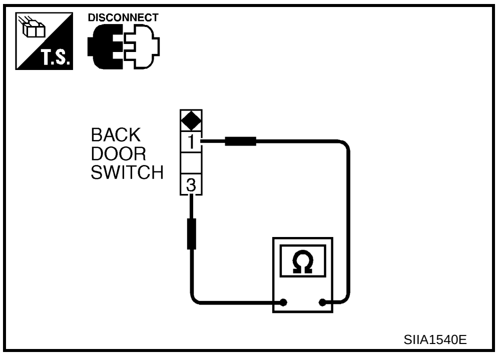

SIIA1540E

OK or NG

OK >> Check the following.
- Door switch ground circuit or door switch ground condition
- Harness for open or short between smart entrance control unit and door switch

NG >> Replace door switches.

Diagnostic Procedure 4

AIS00633

Hood Switch Circuit Check

1. CHECK HOOD SWITCH INPUT SIGNAL

Check voltage between smart entrance control unit harness connector and ground.

Connector	Terminals (wire color)		Condition of hood	Voltage [V] (Approx.)
	(+)	(–)		
M90	6 (W/L)	Ground	Open	0
			Close	5

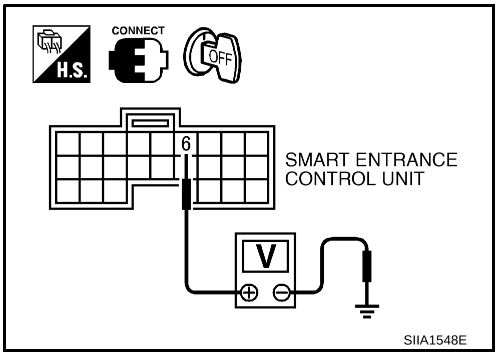

SIIA1548E

OK or NG

OK >> Hood switch is OK.
NG >> GO TO 2.

2. CHECK HOOD SWITCH CONDITION

Check hood switch and hood fitting condition. Refer to BL-12, "Fitting Adjustment" .

OK or NG

OK >> GO TO 3.
NG >> Adjust installation of hood switch.

3. CHECK HOOD SWITCH

1. Disconnect hood switch connector.
2. Check continuity between hood switch terminals.

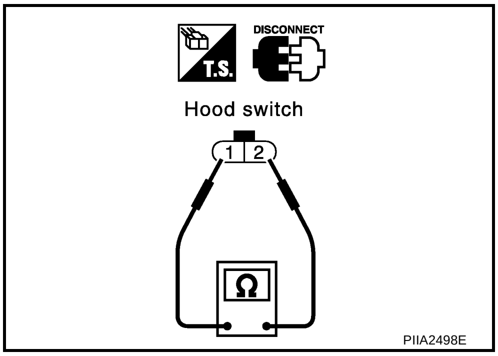

Terminals		Condition of hood switch	Continuity
1	2	Closed (Pushed)	No
		Open (Released)	Yes

OK or NG

OK >> Check the following.
- Hood switch ground circuit
- Harness for open or short between hood switch and smart entrance control unit

NG >> Replace hood switch.

Diagnostic Procedure 5

AIS00634

Door Key Cylinder Switch (Driver side) Circuit Check

1. CHECK DOOR KEY CYLINDER SWITCH SIGNAL

Check voltage between smart entrance control unit harness connector and ground.

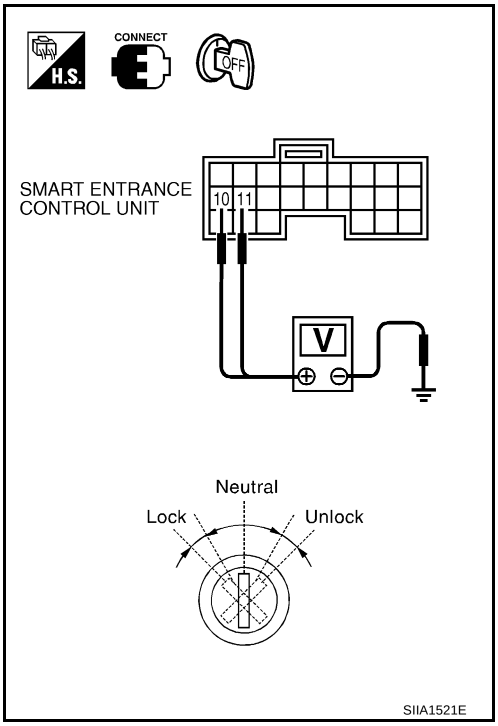

Connector	Terminals (Wire color) (+)	Terminals (Wire color) (-)	Condition of door key cylinder switch (driver side)	Voltage (V) (Approx.)
M90	10 (GY/R)	Ground	Unlock	0
			Neutral / Lock	5
	11 (Y/PU)		Lock	0
			Neutral / Unlock	5

OK or NG

OK >> Door key cylinder switch (driver side) circuit is OK.
NG >> GO TO 2.

2. CHECK DOOR KEY CYLINDER SWITCH

1. Turn ignition switch OFF.
2. Disconnect door key cylinder switch (driver side) connector.
3. Check continuity between door key cylinder switch (driver side) terminals 1, 3 and 2.

Terminal		Condition of door key cylinder switch (driver side)	Continuity
1	2	Lock	Yes
		Neutral / Unlock	No
3		Unlock	Yes
		Neutral / Lock	No

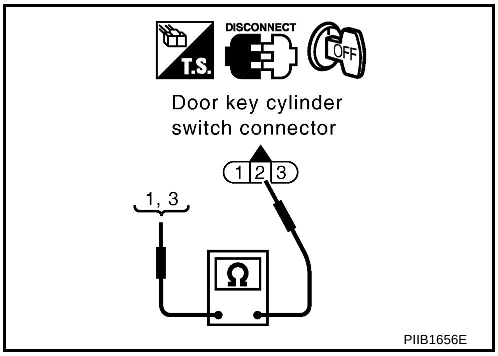

OK or NG

OK >> Check the following.
- Door key cylinder switch (driver side) ground circuit
- Harness for open or short between time control unit and door key cylinder switch (driver side)

NG >> Replace door key cylinder switch (driver side).

Door Key Cylinder Switch (Passenger side) Circuit Check

1. CHECK DOOR KEY CYLINDER SWITCH SIGNAL

Check voltage between smart entrance control unit harness connector and ground.

Connector	Terminals (Wire color)		Condition of door key cylinder switch (passenger side)	Voltage (V) (Approx.)
	(+)	(-)		
M90	10 (GY/R)	Ground	Unlock	0
			Neutral / Lock	5
	11 (Y/PU)		Lock	0
			Neutral / Unlock	5

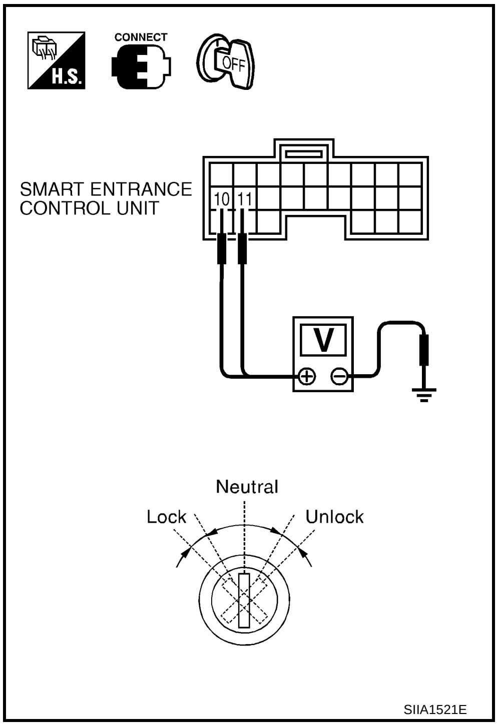

OK or NG

OK >> Door key cylinder switch (passenger side) circuit is OK.
NG >> GO TO 2.

2. CHECK DOOR KEY CYLINDER SWITCH

1. Turn ignition switch OFF.
2. Disconnect door key cylinder switch (passenger side) connector.
3. Check continuity between door key cylinder switch (passenger side) terminals 1, 3 and 2.

Terminal		Condition of door key cylinder switch (passenger side)	Continuity
1	2	Unlock	Yes
		Neutral / Lock	No
3		Lock	Yes
		Neutral / Unlock	No

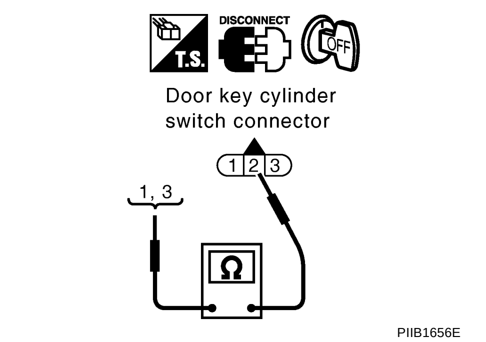

OK or NG

OK >> Check the following.
- Door key cylinder switch (passenger side) ground circuit
- Harness for open or short between time control unit and door key cylinder switch (passenger side)

NG >> Replace door key cylinder switch (passenger side).

Diagnostic Procedure 6

AIS00635

Security Indicator Lamp Circuit Check

1. INDICATOR LAMP CHECK

Check indicator lamp condition.

OK or NG

OK >> GO TO 2.
NG >> Replace indicator lamp.

2. CHECK POWER SUPPLY CIRCUIT FOR INDICATOR LAMP

1. Disconnect security indicator lamp connector.
2. Check voltage between indicator lamp harness connector M28 terminal 1 and ground.

1 (L) – Ground : Battery voltage

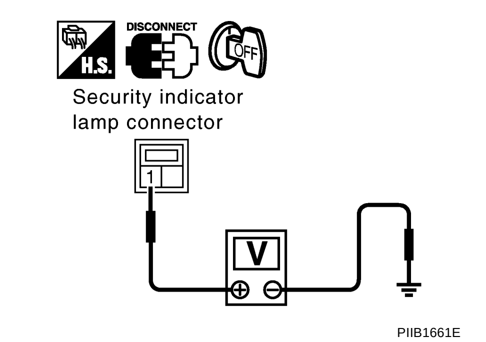

OK or NG

OK >> Check harness for open or short between security indicator lamp and smart entrance.

NG >> Check the following.
- 10A fuse [No. 28, located in fuse block (J/B)]
- Harness for open or short between security indicator lamp and smart entrance control unit.

Diagnostic Procedure 7

AIS00636

Theft Warning Horn Circuit Check

1. CHECK HORN

Check if horn sounds with horn switch.

Does horn operate?

Yes >> GO TO 2.
No >> Check horn circuit. Refer to WW-18, "Wiring Diagram — HORN —" .

2. CHECK HORN REMINDER OPERATION

1. Turn ignition switch OFF.
2. Disconnect smart entrance control unit harness connector.
3. Apply ground to smart entrance control unit harness connector M91 terminal 42 (W/G).

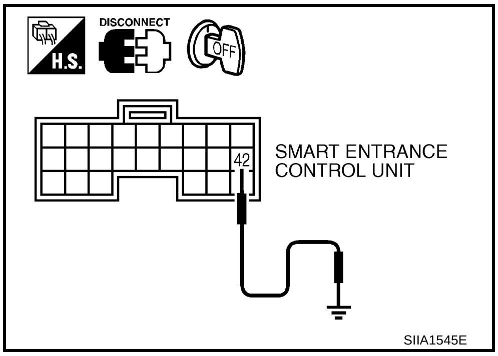

SIIA1545E

Does horn operate?

Yes >> Replace smart entrance control unit.
No >> GO TO 3.

3. CHECK HORN RELAY POWER SUPPLY

1. Remove horn relay.
2. Check voltage between horn relay harness connector E4 terminal 2 and ground.

2 (G/B) – Ground : Battery voltage

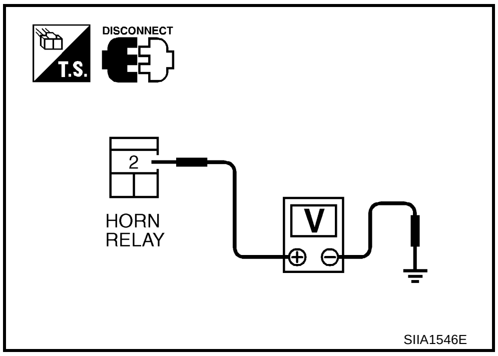

SIIA1546E

OK or NG

OK >> Check harness open or short between smart entrance control unit and horn relay.
NG >> Check harness open or short between horn relay and fuse.

Diagnostic Procedure 8

AIS00637

Hazard Warning Lamp Circuit Check

1. CHECK HAZARD WARNING LAMP

Check if hazard warning lamp flashes with hazard switch.

Does hazard warning lamp operate?

Yes >> GO TO 2.
No >> Check hazard warning lamp circuit.

2. CHECK HAZARD WARNING LAMP OPERATION

1. Turn ignition switch OFF.
2. Disconnect smart entrance control unit connector.
3. Check the following at when push the key fob switch.
   Check voltage between smart entrance control unit harness connector M91terminal 47, 48 and ground.

47 (G/B) – Ground : Battery voltage
48 (G/Y) – Ground : Battery voltage

OK or NG

OK >> Check harness for open or short between smart entrance control unit and hazard switch.
NG >> Replace smart entrance control unit.

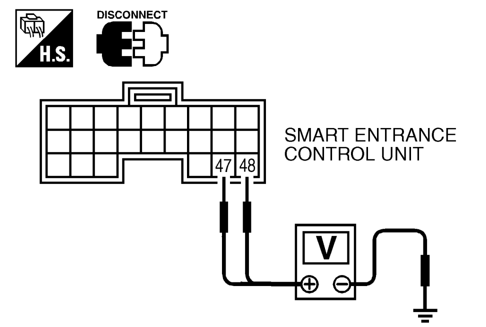

SIIA1544E

NVIS (NISSAN VEHICLE IMMOBILIZER SYSTEM-NATS)

PFP:25386

Component Parts and Harness Connector Location

AIS005YM

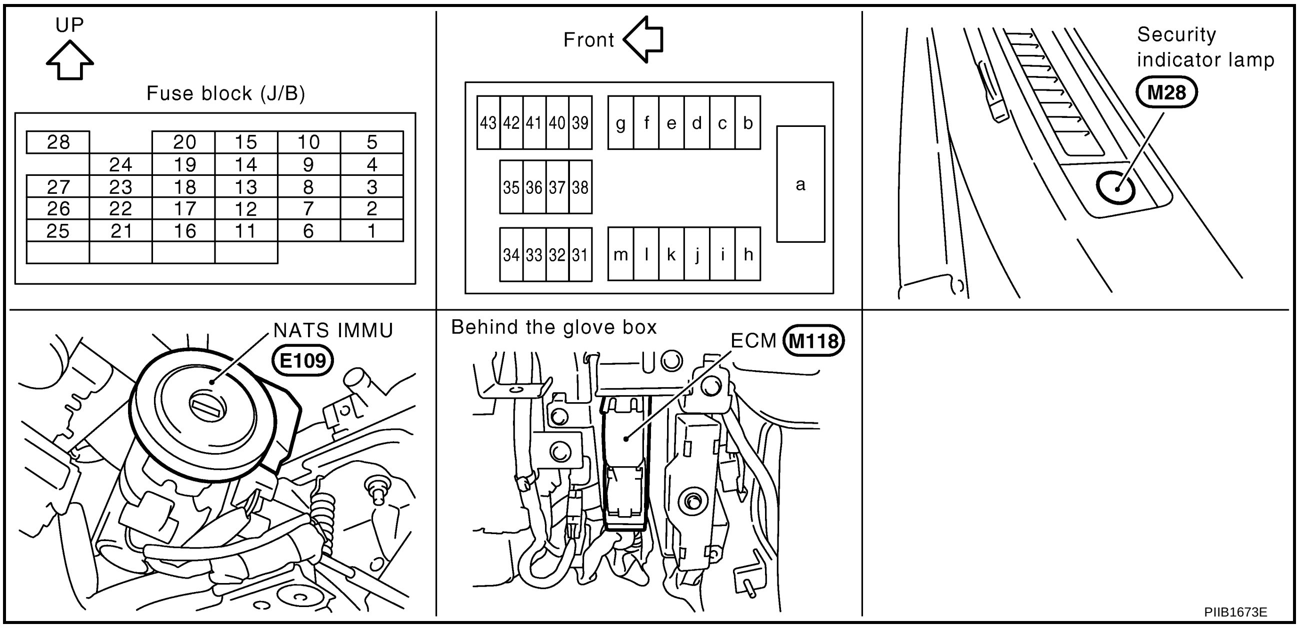

NOTE:
If customer reparts a “No start” condition, request ALL KEYS to brought to an NISSAN dealer in case of a NAVIS (NATS) malfunction.

System Description

AIS005YN

NVIS (Nissan Vehicle Immobilizer System - NATS) has the following immobilizer functions:

- Since only NVIS (NATS) ignition keys, whose ID Nos. have been registered into the ECM and NATS IMMU allow the engine to run, operation of a stolen vehicle without a NVIS (NATS) registered key is prevented by NVIS (NATS).
  That is to say, NVIS (NATS) will immobilize the engine if someone tries to start it without the registered key of NVIS (NATS).
- All of the originally supplied ignition key IDs have been registered in NVIS (NATS).
  If requested by the vehicle owner, a maximum of five key IDs can be registered into the NVIS (NATS) components.
- The security indicator blinks when the ignition switch is in “OFF” or “ACC” position. Therefore, NVIS (NATS) warns outsiders that the vehicle is equipped with the anti-theft system.
- When NVIS (NATS) detects trouble, the security indicator lamp lights up as follows.
- NVIS (NATS) trouble diagnoses, system initialization and additional registration of other NVIS (NATS) ignition key IDs must be carried out using CONSULT-II hardware and CONSULT-II NATS software.
  Regarding the procedures of NVIS (NATS) initialization and NATS ignition key ID registration, refer to CONSULT-II operation manual, NATS - IVIS / NVIS.
- **When servicing a malfunction of the NVIS (NATS) (indicated by lighting up of Security Indicator Lamp) or registering another NATS ignition key ID no., it may be necessary to re-register original key identification. Therefore, be sure to receive ALL KEYS from vehicle owner.**

System Composition

AIS005YO

The immobilizer function of the NVIS (NATS) consists of the following:

- NATS ignition key
- NATS immobilizer control unit (IMMU) located in the ignition key cylinder
- Engine control module (ECM)
- Security indicator

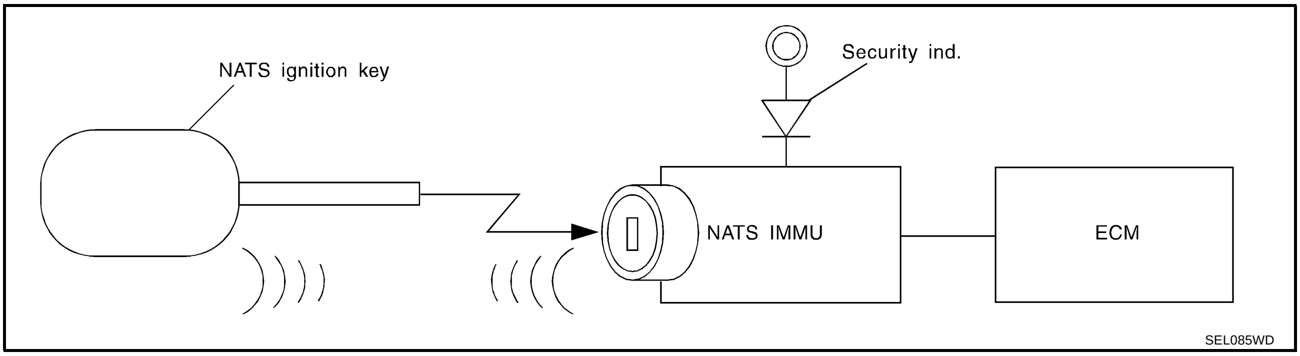

ECM Re-communicating Function

AIS005YP

Performing following procedure can automatically perform re-communication of ECM and NATS IMMU, but only when the ECM has been replaced with a new one (*1).
*1: New one means a virgin ECM which has never been energized on-board.
(In this step, initialization procedure by CONSULT-II is not necessary)

NOTE:

- **When registering new Key IDs or replacing the ECM other than brand new, refer to CONSULT-II Operation Manual NATS - IVIS / NVIS.**
- **If multiple keys are attached to the key holder, separate them before work.**
- **Distinguish keys with unregistered key ID from those with registered ID.**

1. Install ECM.
2. Using a registered key (*2), turn ignition switch to “ON”.
   *2: To perform this step, use the key (except for card plate key) that has been used before performing ECM replacement.
3. Maintain ignition switch in “ON” position for at least 5 seconds.
4. Turn ignition switch to “OFF”.
5. Start engine.
   If engine can be started, procedure is completed.
   If engine cannot be started, refer to CONSULT-II Operation Manual NATS - IVIS / NVIS and initialize control unit.

Wiring Diagram — NATS —

AIS005YQ

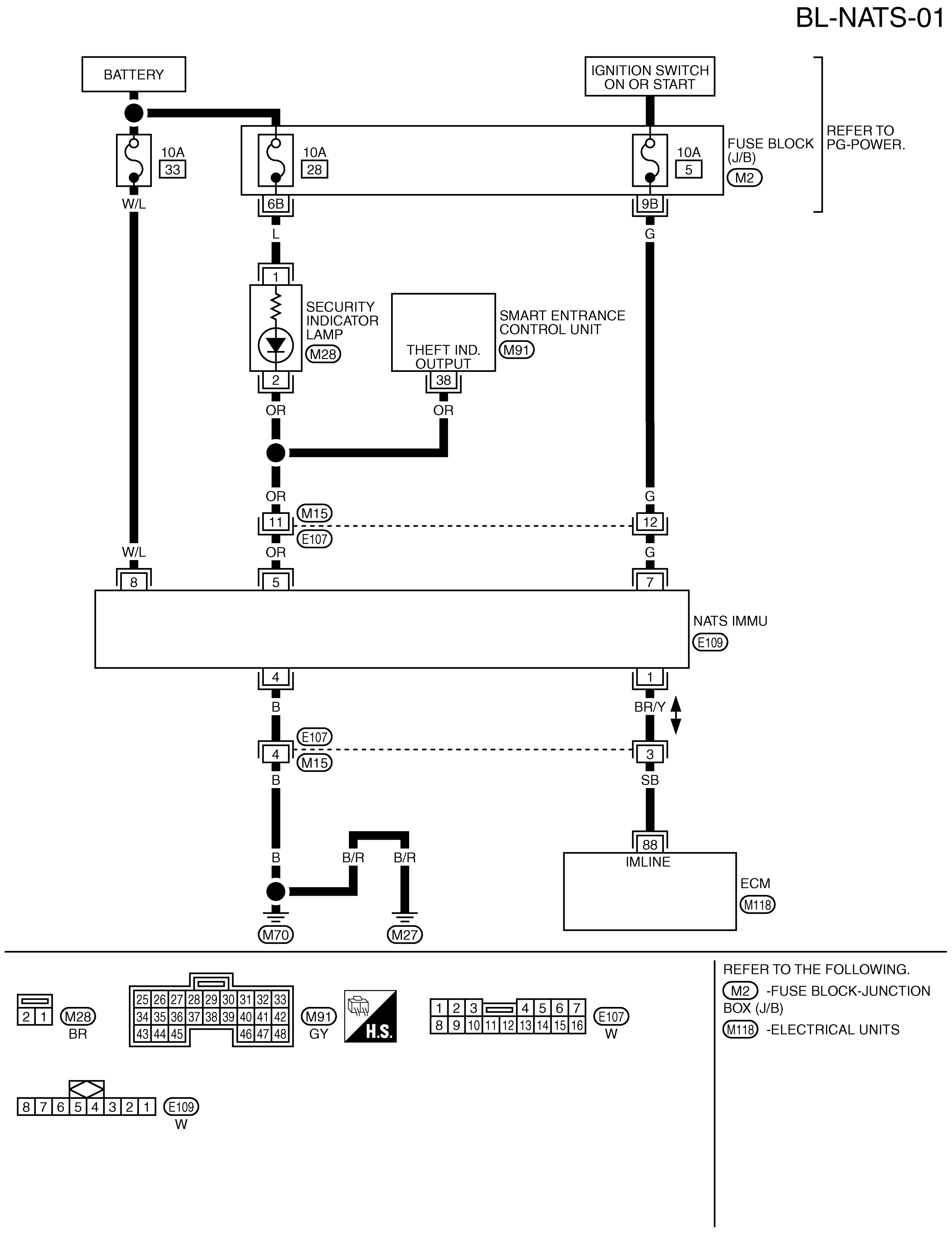

TIWB0061E

CONSULT-II

AIS005YS

CONSULT-II INSPECTION PROCEDURE

1. Turn ignition switch OFF.
2. Insert NVIS (NATS) program card into CONSULT-II.

   Program card : NATS (AEN02C–1)

3. Connect CONSULT-II to data link connector.

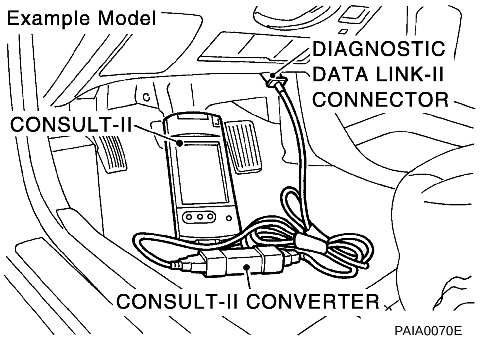

PAIA0070E

4. Turn ignition switch ON.
5. Touch “START”.

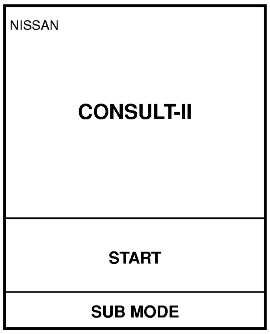

PBR455D

6. Touch “OTHER”.

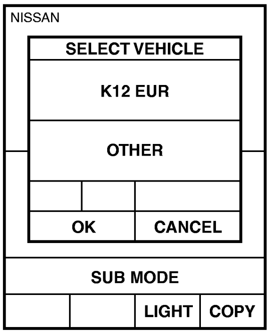

PIIB0900E

7. Select “NATS V.5.0”.

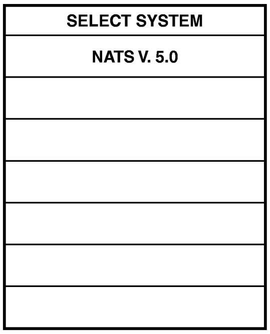

SEL027X

8. Perform each diagnostic test mode according to each service procedure.

For further information, see the CONSULT-II Operation Manual, NATS - IVIS / NVIS.

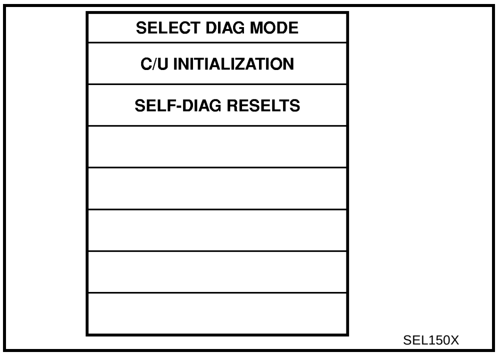

SEL150X

CONSULT-II DIAGNOSTIC TEST MODE FUNCTION

CONSULT-II DIAGNOSTIC TEST MODE	Description
C/U INITIALIZATION	When replacing any of the following components, C/U initialization and re-registration of all NATS ignition keys are necessary. [NATS ignition key/IMMU/ECM]
SELF-DIAG RESULTS	Detected items (screen terms) are as shown in the chart. BL-103, "NVIS (NATS) SELF-DIAGNOSTIC RESULTS ITEM CHART"

NOTE:

- When any initialization is performed, all ID previously registered will be erased and all NATS ignition keys must be registered again.
- The engine cannot be started with an unregistered key. In this case, the system may show “DIFFERENCE OF KEY” or “LOCK MODE” as a self-diagnostic result on the CONSULT-II screen.
- In rare case, “CHAIN OF ECM-IMMU” might be stored as a self-diagnostic result during key registration procedure, even if the system is not malfunctioning.

HOW TO READ SELF-DIAGNOSTIC RESULTS

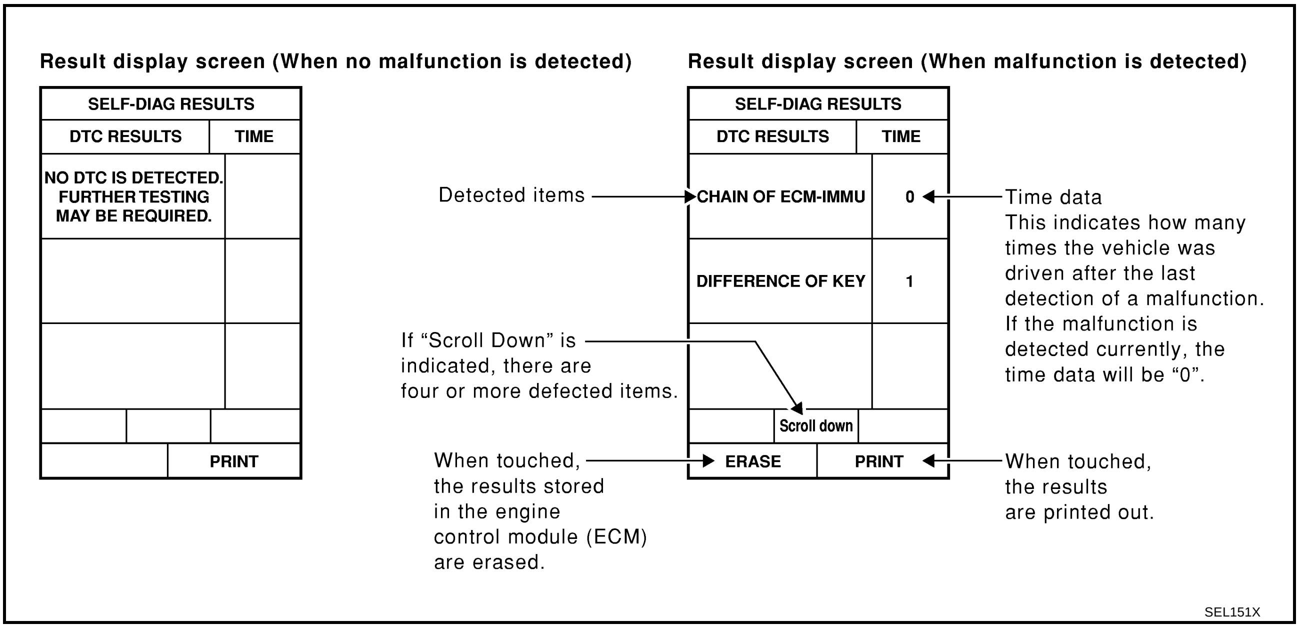

SEL151X

NVIS (NATS) SELF-DIAGNOSTIC RESULTS ITEM CHART

Detected items [NVIS (NATS) program card screen terms]	P No. Code (Self-diagnostic result of "ENGINE"	Malfunction is detected when.....	Reference page
ECM INT CIRC-IMMU	NATS MAL-FUNCTION P1613	The malfunction of ECM internal circuit of IMMU communication line is detected.	BL-107
CHAIN OF ECM-IMMU	NATS MAL-FUNCTION P1612	Communication impossible between ECM and IMMU (In rare case, "CHAIN OF ECM-IMMU" might be stored during key registration procedure, even if the system is not malfunctioning.)	BL-107
DIFFERENCE OF KEY	NATS MAL-FUNCTION P1615	IMMU can receive the key ID signal but the result of ID verification between key ID and IMMU is NG.	BL-110
CHAIN OF IMMU-KEY	NATS MAL-FUNCTION P1614	IMMU cannot receive the key ID signal.	BL-111
ID DISCORD, IMM-ECM	NATS MAL-FUNCTION P1611	The result of ID verification between IMMU and ECM is NG. System initialization is required.	BL-112
LOCK MODE	NATS MAL-FUNCTION P1610	When the starting operation is carried out five or more times consecutively under the following conditions, NATS will shift the mode to one which prevents the engine from being started. ● Unregistered ignition key is used. ● IMMU or ECM's malfunctioning.	BL-114
DON'T ERASE BEFORE CHECKING ENG DIAG	—	All engine trouble codes except NVIS (NATS) trouble code has been detected in ECM.	BL-104

Work Flow

AIS005YT

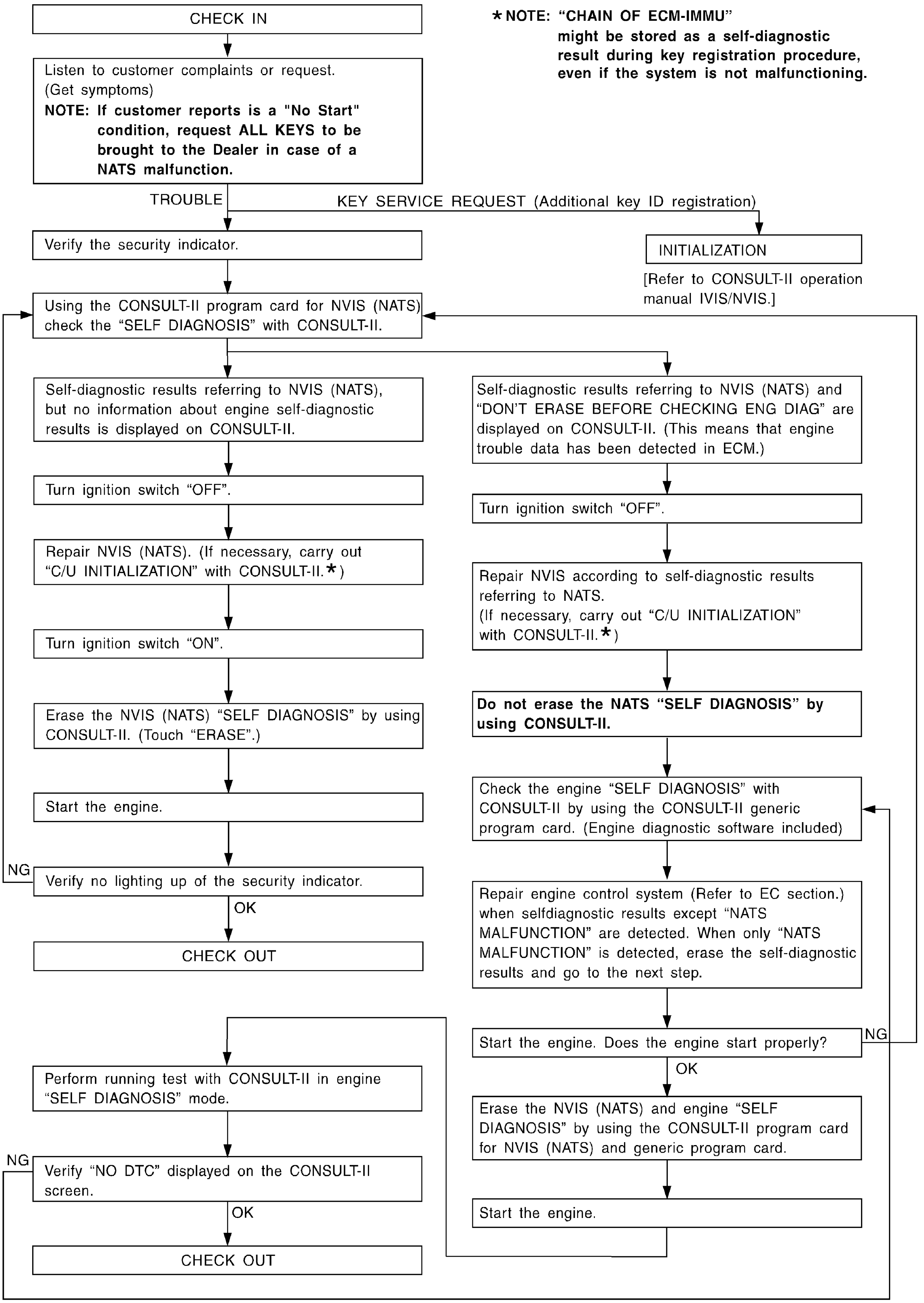

SEL004XA

Trouble Diagnoses

AIS005YU

SYMPTOM MATRIX CHART 1

Self-diagnosis related item

SYMPTOM	Displayed “SELF-DIAG RESULTS” on CONSULT-II screen.	DIAGNOSTIC PROCEDURE (Reference page)	SYSTEM (Malfunctioning part or mode)	REFERENCE PART NO. OF ILLUSTRATION ON SYSTEM DIAGRAM
• Security indicator lighting up* • Engine cannot be started	ECM INT CIRC-IMMU	PROCEDURE 1 (BL-107)	ECM	B
	CHAIN OF ECM-IMMU	PROCEDURE 2 (BL-107)	In rare case, “CHAIN OF ECM-IMMU” might be stored during key registration procedure, even if the system is not malfunctioning.	—
			Open circuit in battery voltage line of NATS IMMU circuit	C1
			Open circuit in ignition line of NATS IMMU circuit	C2
			Open circuit in ground line of NATS IMMU circuit	C3
			Open circuit in communication line between NATS IMMU and ECM	C4
			Short circuit between NATS IMMU and ECM communication line and battery voltage line	C4
			Short circuit between NATS IMMU and ECM communication line and ground line	C4
			ECM	B
			NATS IMMU	A
	DIFFERENCE OF KEY	PROCEDURE 3 (BL-110)	Unregistered key	D
			NATS IMMU	A
	CHAIN OF IMMU-KEY	PROCEDURE 4 (BL-111)	Malfunction of key ID chip	E
			NATS IMMU	A
	ID DISCORD, IMM-ECM	PROCEDURE 5 (BL-112)	System initialization has not yet been completed.	F
			ECM	B

SYMPTOM	Displayed "SELF-DIAG RESULTS" on CONSULT-II screen.	DIAGNOSTIC PROCEDURE (Reference page)	SYSTEM (Malfunctioning part or mode)	REFERENCE PART NO. OF ILLUSTRATION ON SYSTEM DIAGRAM
● Security indicator lighting up* ● Engine cannot be started	LOCK MODE	PROCEDURE 7 (BL-114)	LOCK MODE	When the starting operation is carried out five or more times consecutively under the following conditions, NVIS (NATS) will shift the mode to one which prevents the engine from being started. ● Unregistered ignition key is used. ● IMMU or ECM's malfunctioning.
● MIL staying ON ● Security indicator lighting up*	DON'T ERASE BEFORE CHECKING ENG DIAG	WORK FLOW (BL-104)	Engine trouble data and NVIS (NATS) trouble data have been detected in ECM	—

*: When NATS detects trouble, the security indicator lights up while ignition key is in the "ON" position.

SYMPTOM MATRIX CHART 2

Non self-diagnosis related item

SYMPTOM	DIAGNOSTIC PROCEDURE (Reference page)	SYSTEM (Malfunctioning part or mode)	REFERENCE PART NO. OF ILLUSTRATION ON SYSTEM DIAGRAM
Security indictor does not light up.	PROCEDURE 6 (BL-113)	Security indicator	—
		Open circuit between Fuse and IMMU	—
		Continuation of initialization mode	—
		IMMU	A

DIAGNOSTIC SYSTEM DIAGRAM

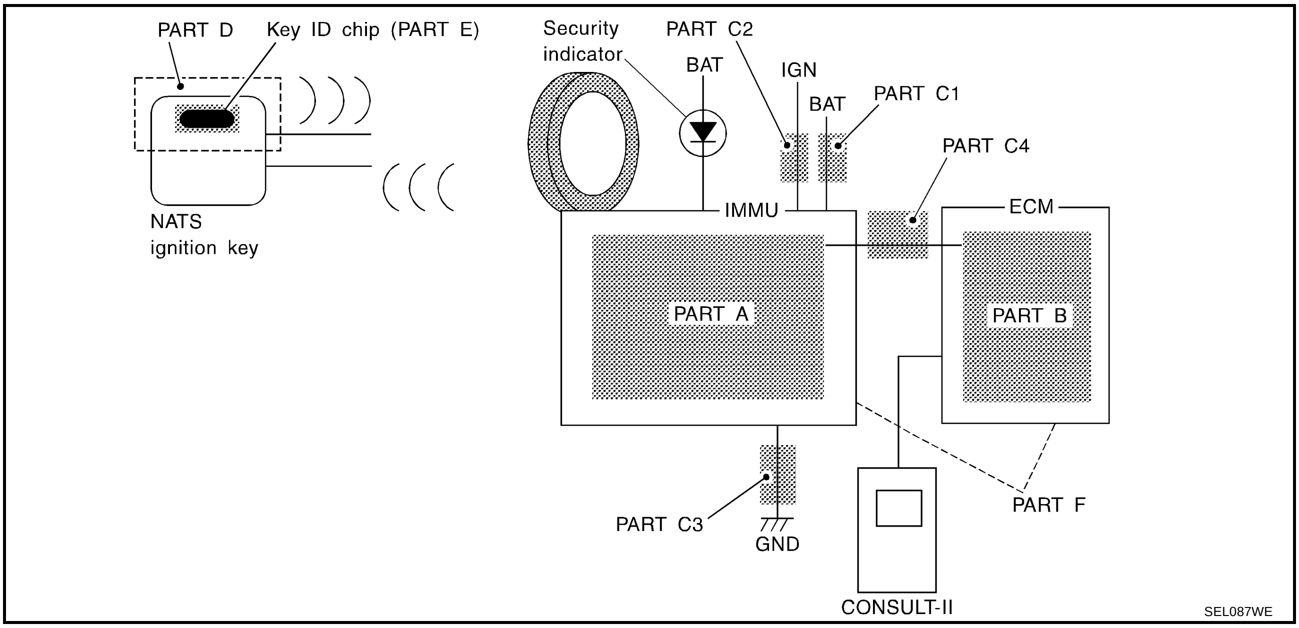

Diagnostic Procedure 1

AIS005YV

Self-diagnostic results:
“ECM INT CIRC-IMMU” displayed on CONSULT-II screen

1. Confirm SELF-DIAGNOSTIC RESULTS “ECM INT CIRC-IMMU” displayed on CONSULT-II screen. Ref. part No. B.
2. Replace ECM.
3. Perform initialization with CONSULT-II.
   For initialization, refer to “CONSULT-II operation manual NATS-IVIS / NVIS ”.

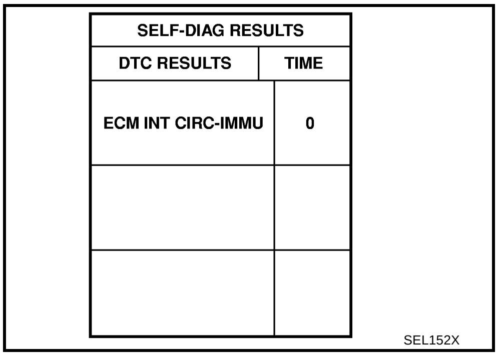

SEL152X

Diagnostic Procedure 2

AIS005YW

Self-diagnostic results:
“CHAIN OF ECM-IMMU” displayed on CONSULT-II screen

1. CONFIRM SELF-DIAGNOSTIC RESULTS

Confirm SELF-DIAGNOSTIC RESULTS “CHAIN OF ECM-IMMU” displayed on CONSULT-II screen.

NOTE:
In rare case, “CHAIN OF ECM-IMMU” might be stored during key registration procedure, even if the system is not malfunctioning.

Is CONSULT-II screen displayed as shown in figure?

Yes >> GO TO 2.
No >> GO TO BL-105, "SYMPTOM MATRIX CHART 1" .

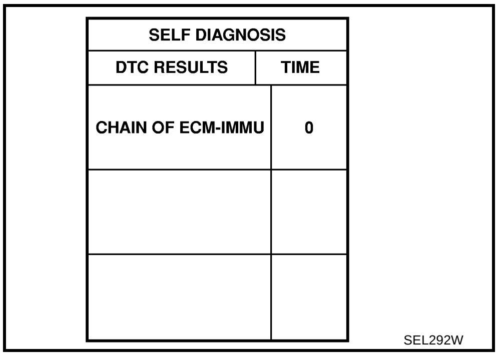

SEL292W

2. CHECK POWER SUPPLY CIRCUIT FOR NATS IMMU

1. Turn ignition switch OFF.
2. Disconnect NATS IMMU connector.
3. Check voltage between NATS IMMU harness connector E109 terminal 8 and ground with CONSULT-II or tester.

8 (W/L) – Ground : Battery voltage

OK or NG

OK >> GO TO 3.
NG >> Check the following.
- 10A fuse (No. 33, located in the fuse and fusible link box)
- Harness for open or short between fuse and NATS IMMU **Ref. Part No. C1**

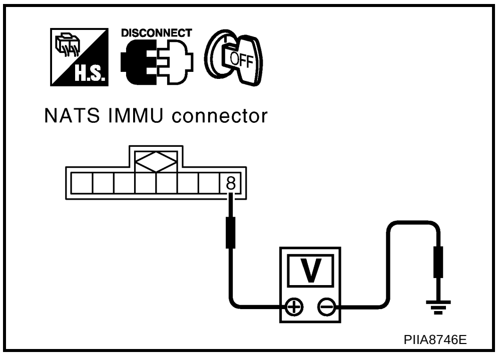

PIIA8746E

3. CHECK IGNITION SWITCH ON SIGNAL

1. Turn ignition switch ON.
2. Check voltage between NATS IMMU harness connector E109 terminal 7 and ground with CONSULT-II or tester.

7 (G) – Ground : Battery voltage

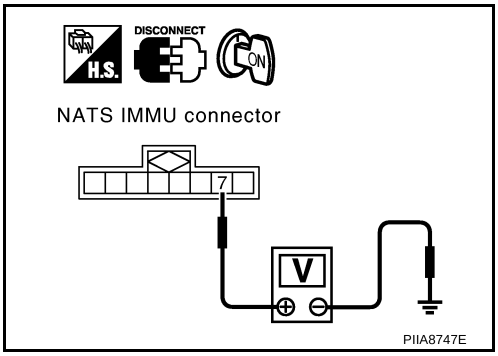

OK or NG

OK >> GO TO 4.
NG >> Check the following.
- 10A fuse [No. 5, located in the fuse block (J/B)]
- Harness for open or short between fuse and NATS IMMU **Ref. part No. C2**

4. CHECK GROUND CIRCUIT FOR NATS IMMU

1. Turn ignition OFF.
2. Check harness continuity between NATS IMMU harness connector E109 terminal 4 and ground.

4 (B) – Ground : Continuity should exist.

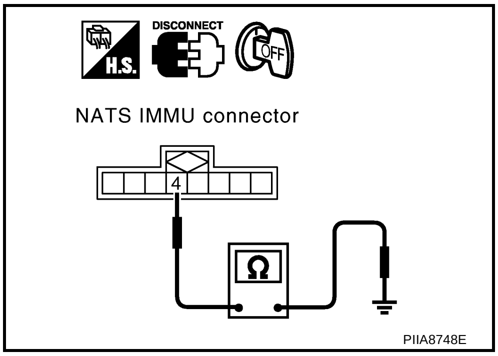

OK or NG

OK >> GO TO 5.
NG >> Repair harness. **Ref. part No. C3**

5. CHECK COMMUNICATION LINE OPEN CIRCUIT

1. Disconnect ECM connector.
2. Check harness continuity between ECM harness connector M118 terminal 88 and NATS IMMU harness connector terminal 1.

88 (SB) – 1 (BR/Y) : Continuity should exist.

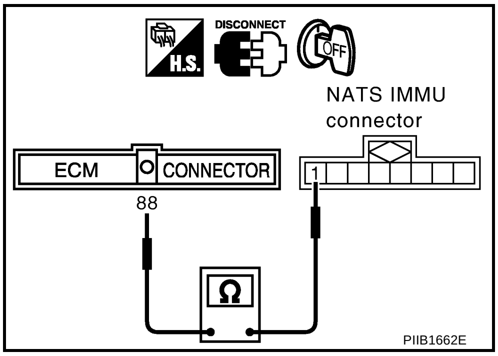

OK or NG

OK >> GO TO 6.
NG >> Repair harness or connector. **Ref. part No. C4**

6. CHECK COMMUNICATION LINE BATTERY SHORT CIRCUIT

1. Turn ignition ON.
2. Check voltage between ECM harness connector M118 terminal 88, NATS IMMU harness connector E109 terminal 1 and ground.

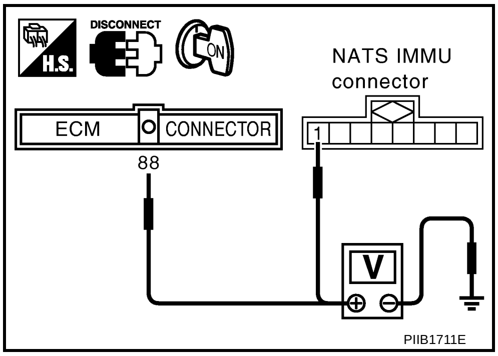

88 (SB) – Ground : Approx. 0V

1 (BR/Y) – Ground : Approx. 0V

OK or NG

OK >> GO TO 7.

NG >> Check the following.

- Communication line is short-circuited with battery voltage line or ignition switch ON line
- Repair harness or connectors. **Ref. part No. C4**

7. CHECK COMMUNICATION LINE GROUND SHORT CIRCUIT

1. Turn ignition switch OFF.
2. Check continuity between ECM harness connector M118 terminal 88, NATS IMMU harness connector E109 terminal 1 and ground.

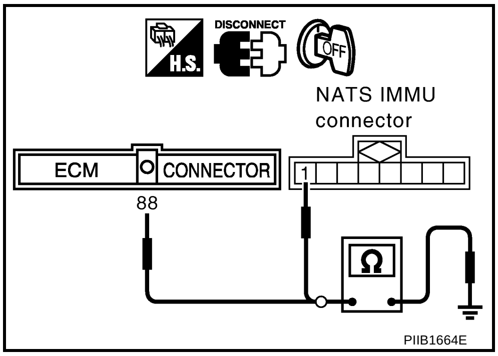

88 (SB) – Ground : Continuity should not exist.

1 (BR/Y) – Ground : Continuity should not exist.

OK or NG

OK >> GO TO 8.

NG >> Check the following.

- Communication line is short-circuited with ground line
- Repair harness or connectors. **Ref. part No. C4**

8. SIGNAL FROM ECM TO IMMU CHECK

1. Connect NATS IMMU connector.
2. Check voltage between NATS IMMU harness connector E109 terminal 1 and ground with analogue tester.

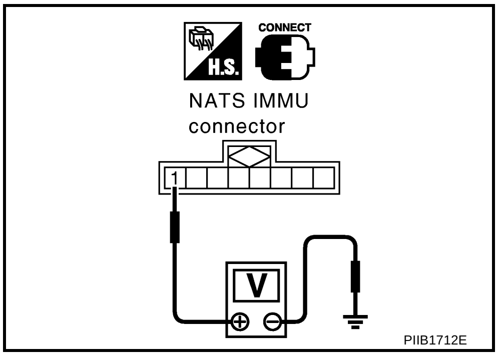

1 (BR/Y) - Ground:

Before turning ignition switch "ON"

: Battery voltage

Just after turning ignition switch "ON"

: Pointer of tester should move.

OK or NG

OK >> NATS IMMU is malfunctioning.

- Replace NATS IMMU. **Ref. part No. A**
- Perform initialization with CONSULT-II
- For the operation of initialization, refer to "CONSULT-II Operation Manual NATS -IVIS / NVIS"

NG >> ECM is malfunctioning.

- Replace ECM. **Ref. part No. B**
- Perform initialization with CONSULT-II
- For the operation of initialization, refer to "CONSULT-II Operation Manual NATS -IVIS / NVIS"

Diagnostic Procedure 3

AIS005YX

Self-diagnostic results:
“DIFFERENCE OF KEY” displayed on CONSULT-II screen

1. CONFIRM SELF-DIAGNOSTIC RESULTS

Confirm SELF-DIAGNOSTIC RESULTS “DIFFERENCE OF KEY” displayed on CONSULT-II screen.

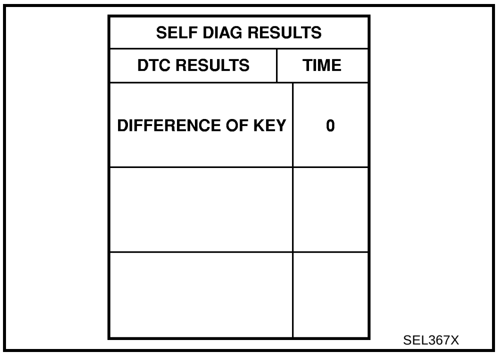

SEL367X

Is CONSULT-II screen displayed as shown in figure?

Yes >> GO TO 2.
No >> GO TO BL-105, "SYMPTOM MATRIX CHART 1" .

2. PERFORM INITIALIZATION WITH CONSULT-II

Perform initialization with CONSULT-II. Re-register all NATS ignition key IDs.
For initialization and registration of NATS ignition key IDs, refer to “CONSULT-II operation manual NATS -IVIS / NVIS”.

NOTE:
If the initialization is not completed or fails, CONSULT-II shows above message on the screen.

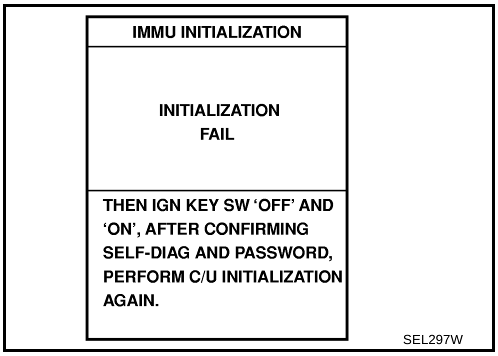

SEL297W

Can the system be initialized and can the engine be started with re-registered NATS ignition key?

Yes >> Ignition key ID was unregistered. **Ref. part No. D**
No >> NAST IMMU is malfunctioning.
- Replace IMMU. **Ref. part No. A**
- Perform initialization with CONSULT-II
- For initialization, refer to “CONSULT-II operation manual NATS - IVIS / NVIS”

Diagnostic Procedure 4

AIS005YY

Self-diagnostic results:
“CHAIN OF IMMU-KEY” displayed on CONSULT-II screen

1. CONFIRM SELF-DIAGNOSTIC RESULTS

Confirm SELF-DIAGNOSTIC RESULTS “CHAIN OF IMMU-KEY” displayed on CONSULT-II screen.

Is CONSULT-II screen displayed as shown in figure?

Yes >> GO TO 2.
No >> GO TO BL-105, "SYMPTOM MATRIX CHART 1" .

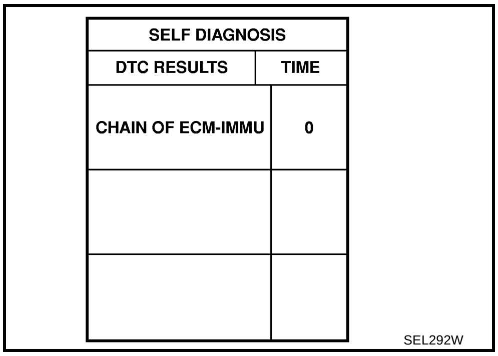

SEL292W

2. CHECK NATS IGNITION KEY ID CHIP

Start engine with another registered NATS ignition key.

Does the engine start?

Yes >> Ignition key ID chip is malfunctioning.
- Replace the ignition key. **Ref. part No. E**
- Perform initialization with CONSULT-II
- For initialization, refer to “CONSULT-II Operation Manual NATS -IVIS / NVIS”

No >> GO TO 3.

3. CHECK HARNESS CONNECTOR CONNECTION

Check NATS IMMU installation.
Refer to BL-115, "How to Replace NATS IMMU" .

OK or NG

OK >> NATS IMMU is malfunctioning.
- Replace NATS IMMU. **Ref. part No. A**
- Perform initialization with CONSULT-II
- For initialization, refer to “CONSULT-II Operation Manual NATS -IVIS / NVIS”

NG >> Reinstall NATS IMMU correctly.

Diagnostic Procedure 5

AIS005YZ

Self-diagnostic results:
“ID DISCORD, IMM-ECM” displayed on CONSULT-II screen

1. CONFIRM SELF-DIAGNOSTIC RESULTS

Confirm SELF-DIAGNOSTIC RESULTS “ID DISCORD, IMM-ECM” displayed on CONSULT-II screen.

NOTE:
“ID DISCORD IMMU-ECM”:
Registered ID of IMMU is in discord with that of ECM.

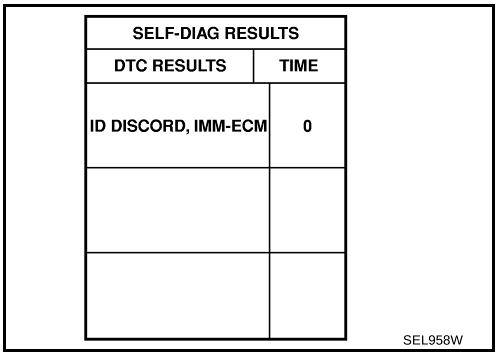

Is CONSULT-II screen displayed as shown in figure?

Yes >> GO TO 2.
No >> GO TO BL-105, "SYMPTOM MATRIX CHART 1" .

2. PERFORM INITIALIZATION WITH CONSULT-II

Perform initialization with CONSULT-II. Re-register all NATS ignition key IDs.
For initialization, refer to “CONSULT-II operation manual NATS -IVIS / NVIS”.

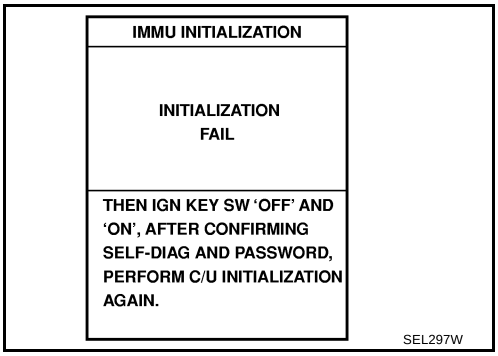

NOTE:
If the initialization is not completed or fails, CONSULT-II shows above message on the screen.

Can the system be initialized?

Yes >>
- Start engine. (END)
- (System initialization had not been completed. **Ref. part No. B**)

No >> ECM is malfunctioning.
- Replace ECM. **Ref. part No. B**
- Perform initialization with CONSULT-II
- For initialization, refer to “CONSULT-II operation manual NATS -IVIS / NVIS”

Diagnostic Procedure 6

AIS005Z0

"SECURITY INDICATOR LAMP DOES NOT LIGHT UP"

1. CHECK FUSE

Check 10A fuse [No. 28, located in the fuse block (J/B)].

Is 10A fuse OK?

Yes >> GO TO 2.
No >> Replace fuse.

2. CHECK SECURITY INDICATOR LAMP

1. Install 10A fuse.
2. Perform initialization with CONSULT-II.
   For initialization, refer to "CONSULT-II Operation Manual NATS - IVIS / NVIS".
3. Turn ignition switch OFF.
4. Start engine and turn ignition switch OFF.
5. Check the security indicator lamp lighting.

Security indicator lamp should be light up.

OK or NG

OK >> INSPECTION END
NG >> GO TO 3.

3. CHECK SECURITY INDICATOR LAMP POWER SUPPLY CIRCUIT

1. Disconnect security indicator lamp connector.
2. Check voltage between security indicator lamp harness connector M28 terminal 1 and ground.

1 (L) – Ground : Battery voltage

OK or NG

OK >> GO TO 4.
NG >> Check harness for open or short between fuse and security indicator lamp.

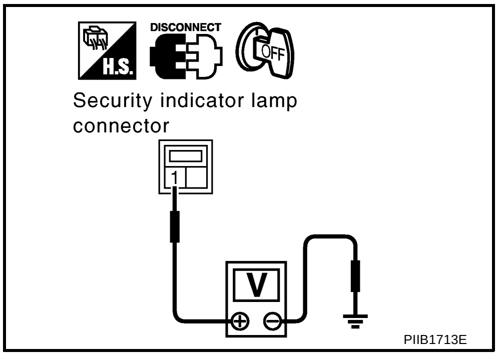

PIIB1713E

4. CHECK SECURITY INDICATOR LAMP

Apply 12V direct current to security indicator lamp connector M28 terminals 1 and 2.

Security indicator lamp should illuminate.

OK or NG

OK >> GO TO 5.
NG >> Replace security indicator lamp.

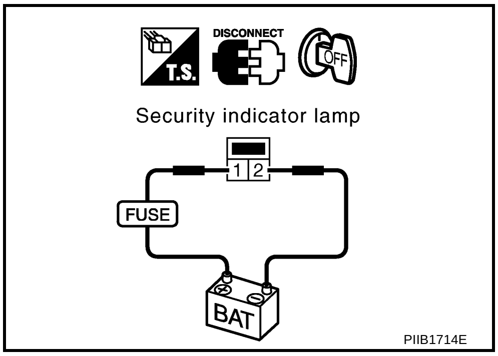

PIIB1714E

5. CHECK NATS IMMU FUNCTION

Check continuity between NATS IMMU harness connector E108 terminal 5 and ground.

5 (OR) – Ground : Continuity should exist intermittently.

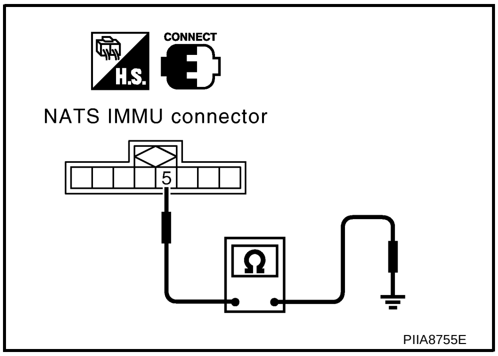

OK or NG

- OK >> Check harness for open or short between security indicator lamp and NATS IMMU.
- NG >> NATS IMMU is malfunctioning.
  - Replace NATS IMMU. **Ref. part No. A**
  - Perform initialization with CONSULT-II
  - For initialization, refer to “CONSULT-II operation manual NATS - IVIS / NVIS”

Diagnostic Procedure 7

AIS005Z1

Self-diagnostic results:
“LOCK MODE” displayed on CONSULT-II screen

1. CONFIRM SELF-DIAGNOSTIC RESULTS

Confirm SELF-DIAGNOSTIC RESULTS “LOCK MODE” is displayed on CONSULT-II screen.

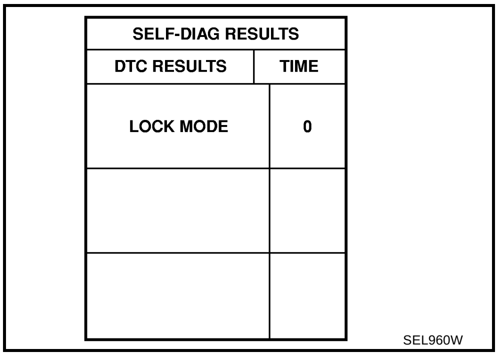

Is CONSULT-II screen displayed as shown in figure?

- Yes >> GO TO 2.
- No >> GO TO BL-105, "SYMPTOM MATRIX CHART 1" .

2. ESCAPE FROM LOCK MODE

1. Turn ignition switch OFF.
2. Turn ignition switch ON with registered key. (Do not start engine.) Wait 5 seconds.
3. Return the key to OFF position.
4. Repeat steps 2 and 3 twice (total of three cycles).
5. Start the engine.

Does engine start?

- Yes >> System is OK. (Now system is escaped from “LOCK MODE”.)
- No >> GO TO 3.

3. CHECK NATS IMMU ILLUSTRATION

Check NATS IMMU installation. Refer to BL-115, "How to Replace NATS IMMU" .

OK or NG

- OK >> GO TO 4.
- NG >> Reinstall NATS IMMU correctly.

A
B
C
D
E
F
G
H
BL
J
K
L
M

4. PERFORM INITIALIZATION WITH CONSULT-II

Perform initialization with CONSULT-II.
For initialization, refer to “CONSULT-II operation manual NATS - IVIS / NVIS”.

NOTE:
If the initialization is not completed or fails, CONSULT-II shows the above message on the screen.

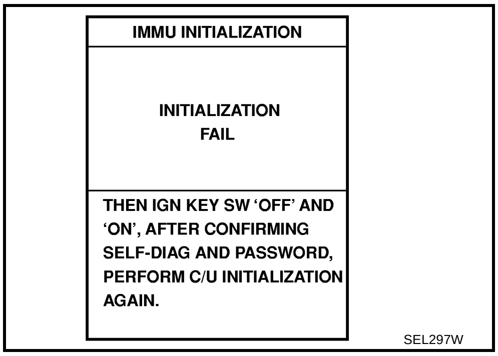

SEL297W

Can the system be initialized?

Yes >> System is OK.
No >> GO TO 5.

5. PERFORM INITIALIZATION WITH CONSULT-II AGAIN

1. Replace IMMU.
2. Perform initialization with CONSULT-II.
   For initialization, refer to “CONSULT-II operation manual NATS - IVIS / NVIS”.

NOTE:
If the initialization is not completed or fails, CONSULT-II shows the above message on the screen.

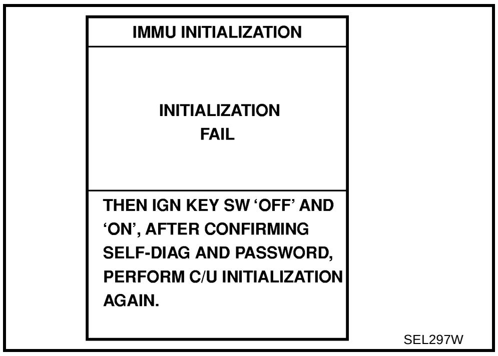

SEL297W

Can the system be initialized?

Yes >> System is OK. (NATS IMMU is malfunctioning. **Ref. part No. A**)
No >> ECM is malfunctioning.
- Replace ECM. **Ref. part No. B**
- Perform initialization with CONSULT-II
- For initialization, refer to “CONSULT-II operation manual NATS - IVIS / NVIS”

How to Replace NATS IMMU

AIS005Z2

NOTE:
- **If NATS IMMU is not installed correctly, NATS system will not operate properly and SELF-DIAG RESULTS on CONSULT-II screen will show “LOCK MODE”.**

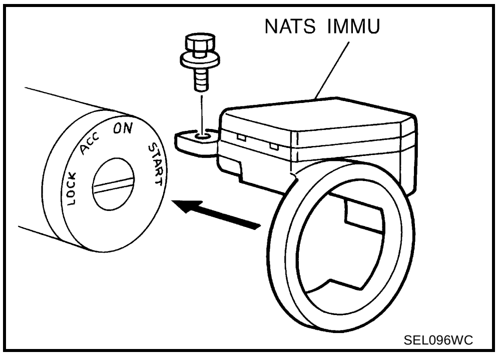

SEL096WC

BODY REPAIR

PFP:60100

Body Exterior Paint Color

AIS0065P

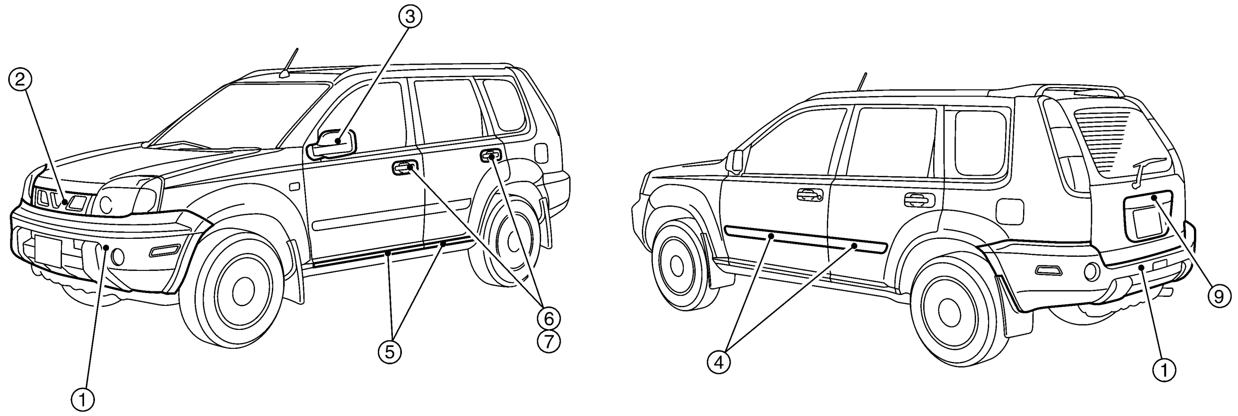

SIIA2415E

Component			Color code	BAX6	BBW6	BDW0	BEV0	BKH3	BKY0	BQX1
			Description	Red	Dark blue	Green	Beige	Black	Silver	White
			Paint type	2S	2P	2P	M	2S	M	3P
			Hard clear coat	×	×	-	×	×	-	-
1	Bumper fascia	Upper	Body color	BAX6	BBW6	BDW0	BEV0	BKH3	BKY0	BQX1
		Lower	Body color	BAX6	BBW6	BDW0	BEV0	BKH3	BKY0	BQX1
			Black	AG64	AG64	AG64	AG64	AG64	AG64	AG64
2	Front grille	Molding	Body color	BAX6	BBW6	BDW0	BEV0	BKH3	BKY0	BQX1
			Chromium-plate	Cr	Cr	Cr	Cr	Cr	Cr	Cr
		Mesh	Black	AG01	AG01	AG01	AG01	AG01	AG01	AG01
3	Door outside mirror		Body color	BAX6	BBW6	BDW0	BEV0	BKH3	BKY0	BQX1
4	Side guard molding		Body color	BAX6	BBW6	BDW0	BEV0	BKH3	BKY0	BQX1
			Black	AG64	AG64	AG64	AG64	AG64	AG64	AG64
5	Lower door protector		Body color	BAX6	BBW6	BDW0	BEV0	BKH3	BKY0	BQX1
6	Door outside handle escutcheon		Body color	BAX6	BBW6	BDW0	BEV0	BKH3	BKY0	BQX1
7	Door outside handle		Chromium-plate	Cr	Cr	Cr	Cr	Cr	Cr	Cr
8	Rear spoiler		Body color	BAX6	BBW6	BDW0	BEV0	BKH3	BKY0	BQX1
9	Back door finisher		Body color	BAX6	BBW6	BDW0	BEV0	BKH3	BKY0	BQX1
			Chromium-plate	Cr	Cr	Cr	Cr	Cr	Cr	Cr

2S:Solid + Clear, M:Metallic, 2P:2-coat pearl, 3P:3-coat pearl

Body Component Parts

AIS0063K

UNDERBODY COMPONENT PARTS

SIIA2416E

1. Radiator core support assembly
2. Upper radiator core support
3. Side radiator core support
4. Lower radiator core support
5. Hood lock stay
6. Hoodledge assembly (RH&LH)
7. Upper hoodledge (RH&LH)
8. Hoodledge reinforcement extension (RH&LH)
9. Lower front hoodledge (RH&LH)
10. Front hoodledge reinforcement (RH&LH)
11. Rear hoodledge reinforcement (RH&LH)
12. Upper dash assembly
13. Front cowl top
14. Upper dash crossmember assembly
15. Side cowl top
16. Lower dash
17. Side dash (RH&LH)
18. Front floor
19. Transmission control reinforcement
20. 2nd crossmember assembly
21. Front floor reinforcement
22. Front side member rear patch
23. Center bearing mounting bracket
24. Inner sill (RH&LH)
25. Rear floor front
26. Rear floor rear
27. Rear floor front extension
28. Rear floor belt anchor reinforcement
29. 2nd seat mounting bracket assembly (RH&LH)
30. Rear floor side (RH&LH)
31. Spare tire clamp bracket
32. 3rd crossmember
33. Front side member closing plate assembly (RH&LH)
34. Front side member front closing plate (RH&LH)
35. Front side member (RH&LH)
36. Battery support bracket (LH)
37. Front side member front extension (RH&LH)
38. Front side member center extension (RH&LH)
39. Rear seat crossmember
40. 5th crossmember
41. Center rear crossmember assembly
42. Rear side member assembly (RH&LH)
43. Rear side member front extension (RH&LH)
44. Rear side member extension (RH&LH)
45. Muffler mounting bracket assembly (LH)
46. Rear hook (LH)
47. Battery mounting reinforcement (LH)
48. Front floor reinforcement (RH&LH)

BODY COMPONENT PARTS

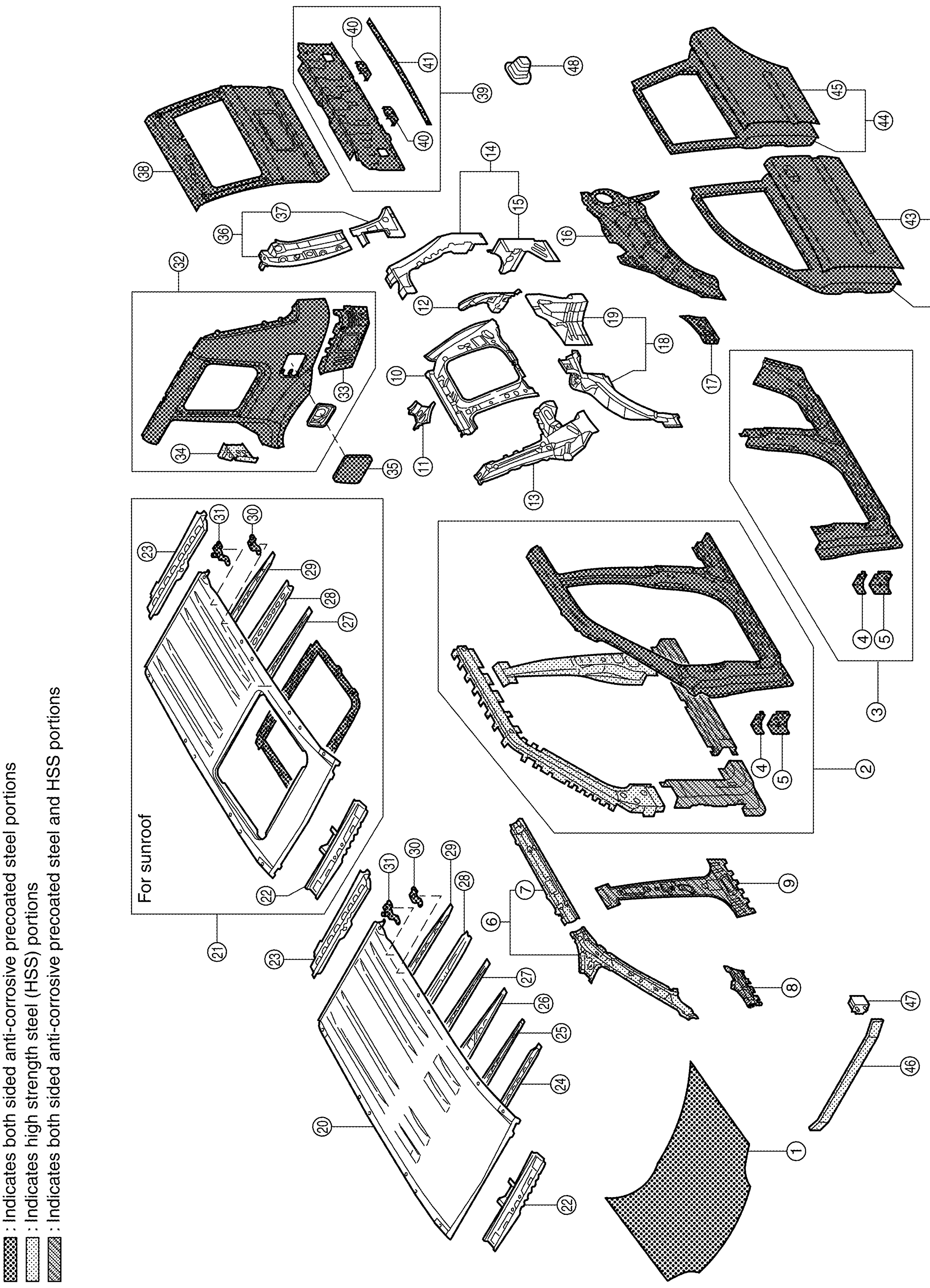

1. Hood
2. Side body assembly (RH&LH)
3. Outer sill assembly (RH&LH)
4. Front fender bracket (RH&LH) No.1
5. Front fender bracket (RH&LH) No.2
6. Inner upper front pillar assembly (RH&LH)
7. Inner side roof rail (RH&LH)
8. Lower front pillar reinforcement (RH&LH)
9. Inner center pillar (RH&LH)
10. Inner rear pillar (RH&LH)
11. Rear roof rail brace (RH&LH)
12. Inner lower rear pillar (RH&LH)
13. Inner rear pillar reinforcement (RH&LH)
14. Back pillar reinforcement assembly (RH&LH)
15. Lower rear pillar reinforcement (RH&LH)
16. Outer rear wheelhouse (RH&LH)
17. Outer rear wheelhouse extension (RH&LH)
18. Inner rear wheelhouse (RH&LH)
19. Inner rear wheelhouse rear extension (RH&LH)
20. Roof
21. Roof assembly
22. Front roof rail
23. Rear roof rail
24. Roof bow No.1
25. Roof bow No.2
26. Roof bow No.3
27. Roof bow No.4
28. Roof bow No.5
29. Rear roof bow
30. Center roof rack bracket (RH&LH)
31. Roof rack bracket (RH&LH)
32. Rear fender assembly (RH&LH)
33. Rear fender extension (RH&LH)
34. Striker retainer (RH&LH)
35. Fuel filler lid
36. Rear combination lamp base (RH&LH)
37. Rear fender corner (RH&LH)
38. Back door assembly
39. Rear panel assembly
40. Rear bumper side bracket
41. Rear panel stiffener
42. Front door assembly (RH&LH)
43. Outer front door panel (RH&LH)
44. Rear door assembly (RH&LH)
45. Outer rear door panel (RH&LH)
46. Front bumper reinforcement
47. Front bumper stay (RH&LH)
48. Rear bumper stay (RH&LH)

Corrosion Protection

AIS0063L

DESCRIPTION

To provide improved corrosion prevention, the following anti-corrosive measures have been implemented in NISSAN production plants. When repairing or replacing body panels, it is necessary to use the same anti-corrosive measures.

Anti-Corrosive Precoated Steel (Galvannealed Steel)

To improve repairability and corrosion resistance, a new type of anti-corrosive precoated steel sheet has been adopted replacing conventional zinc-coated steel sheet.
Galvannealed steel is electroplated and heated to form Zinc-iron alloy, which provides excellent and long term corrosion resistance with cationic electrodeposition primer.

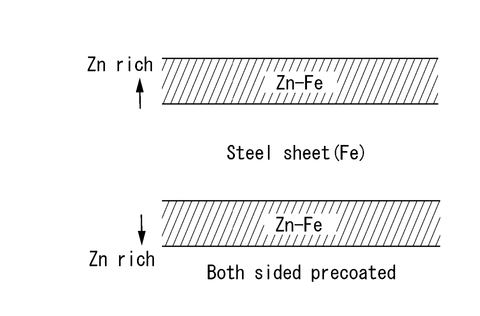

SIIA2294E

Nissan Genuine Service Parts are fabricated from galvannealed steel. Therefore, it is recommended that GENUINE NISSAN PARTS or equivalent be used for panel replacement to maintain the anti-corrosive performance built into the vehicle at the factory.

Phosphate Coating Treatment and Cationic Electrodeposition Primer

A phosphate coating treatment and a cationic electrodeposition primer, which provide excellent corrosion protection, are employed on all body components.

CAUTION:

Confine paint removal during welding operations to an absolute minimum.

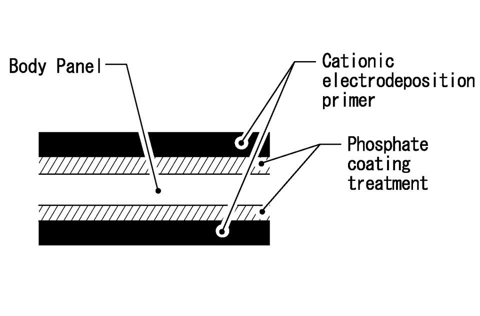

PIIA0095E

Nissan Genuine Service Parts are also treated in the same manner. Therefore, it is recommended that GENUINE NISSAN PARTS or equivalent be used for panel replacement to maintain anti-corrosive performance built into the vehicle at the factory.

ANTI-CORROSIVE WAX

To improve corrosion resistance, anti-corrosive wax is applied inside the body sill and inside other closed sections. Accordingly, when replacing these parts, be sure to apply anti-corrosive wax to the appropriate areas of the new parts. Select an excellent anti-corrosive wax which will penetrate after application and has a long shelf life.

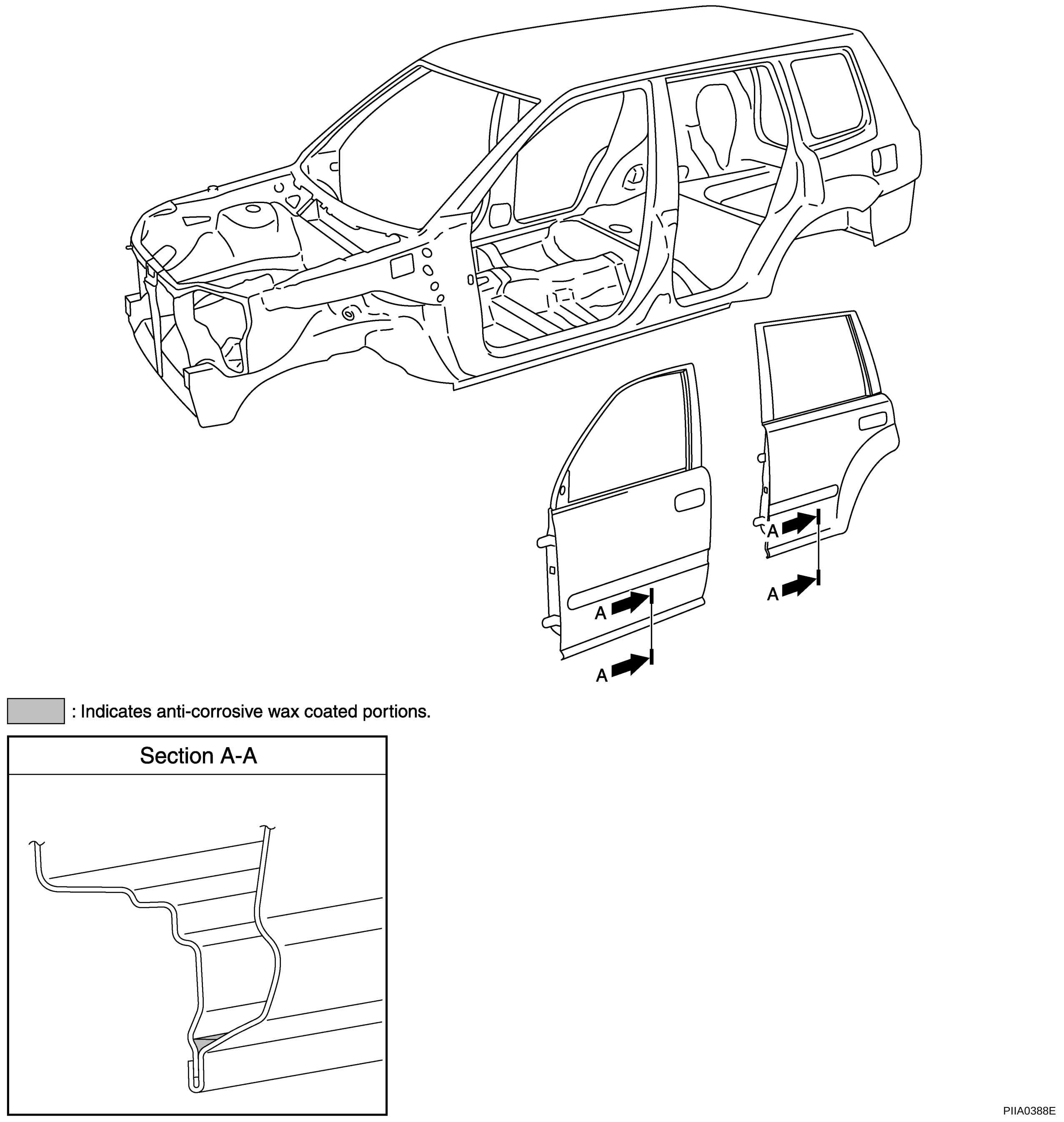

UNDERCOATING

The underside of the floor and wheelhouse are undercoated to prevent rust, vibration, noise and stone chipping. Therefore, when such a panel is replaced or repaired, apply undercoating to that part. Use an undercoating which is rust preventive, soundproof, vibration-proof, shock-resistant, adhesive, and durable.

Precautions in Undercoating

1. Do not apply undercoating to any place unless specified (such as the areas above the muffler and three way catalyst which are subjected to heat).
2. Do not undercoat the exhaust pipe or other parts which become hot.
3. Do not undercoat rotating parts.
4. Apply bitumen wax after applying undercoating.

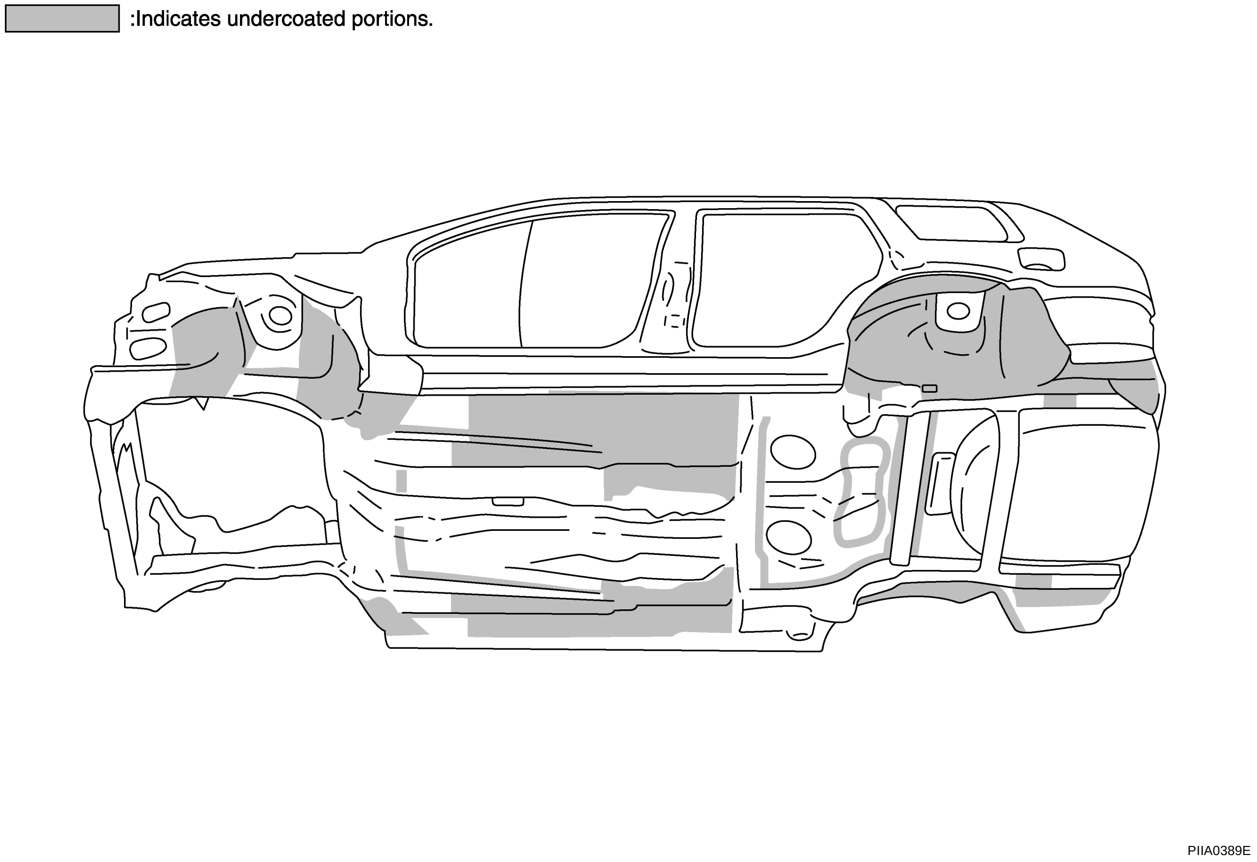

STONE GUARD COAT

To prevent damage caused by stones, the lower outer body panel (fender, door, etc.) have an additional layer of Stone Guard Coating over the ED primer coating. When replacing or repairing these panels, apply Stone Guard coating to the same portions as before. Use a coating which is rust preventive, durable, shock-resistant and has a long shelf life.

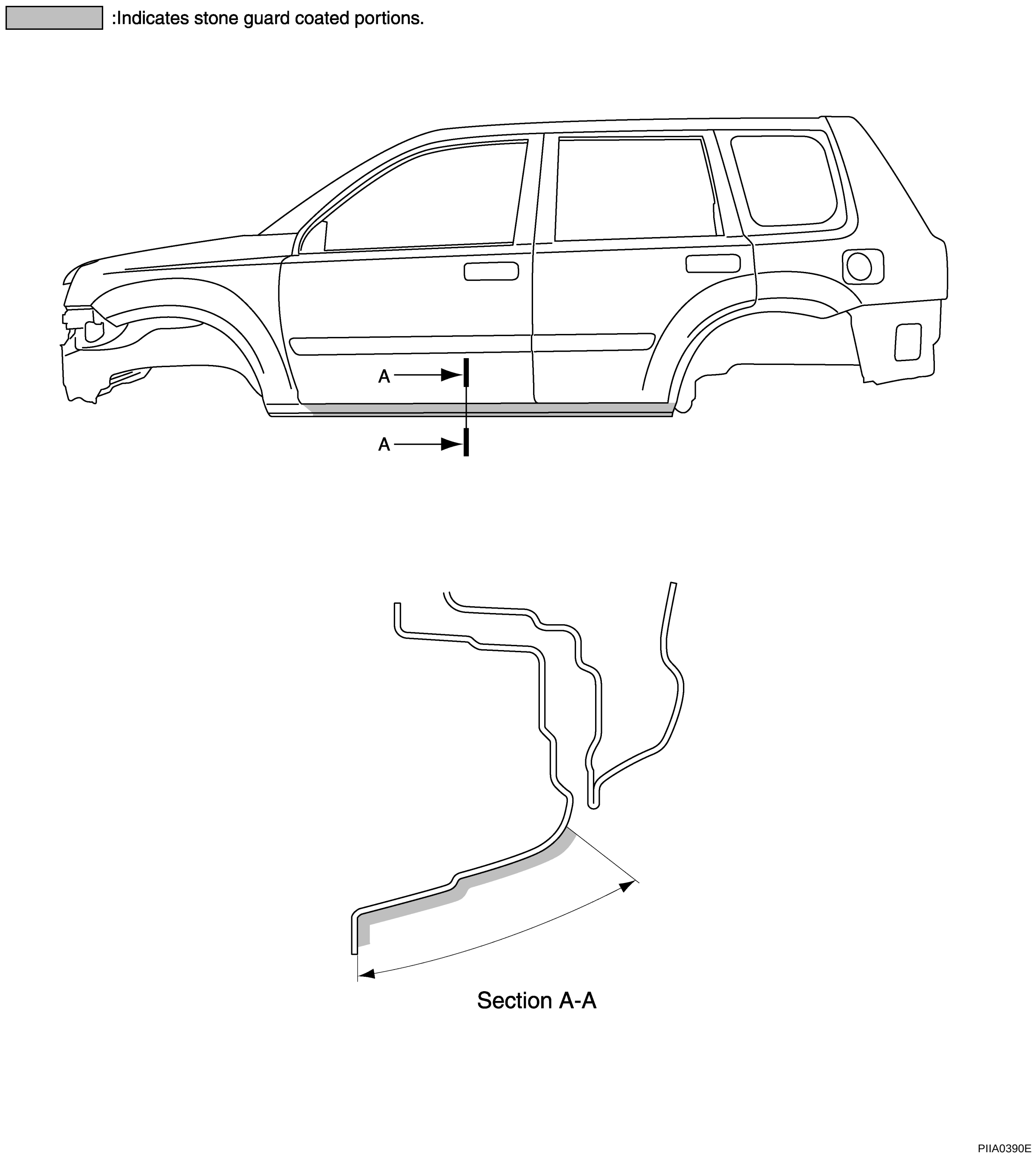

Body Sealing

AIS0063M

DESCRIPTION

The following figure shows the areas which are sealed at the factory. Sealant which has been applied to these areas should be smooth and free from cuts or gaps. Care should be taken not to apply an excess amount of sealant and not to allow other unaffected parts to come into contact with the sealant.

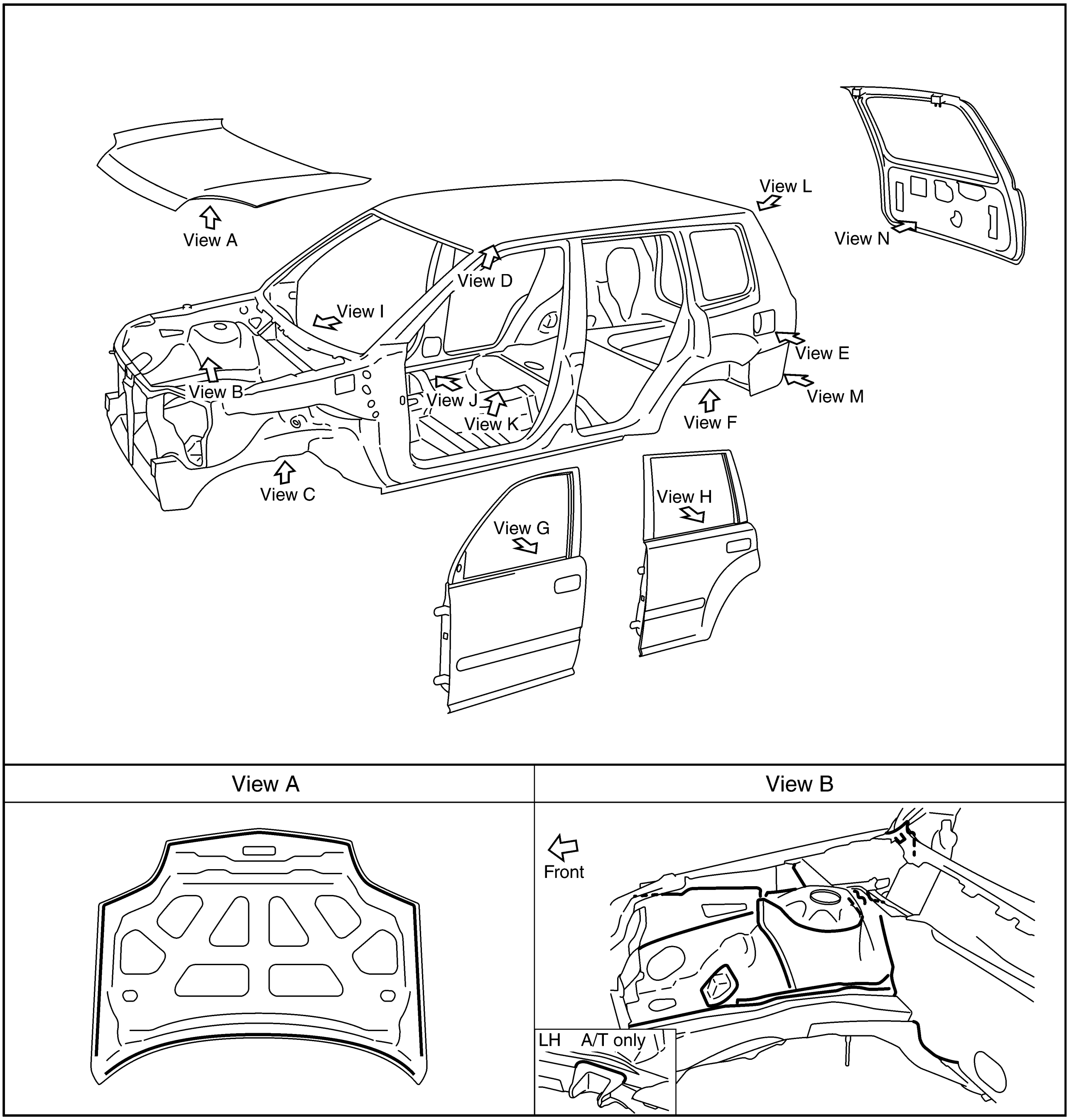

SIIA2418E

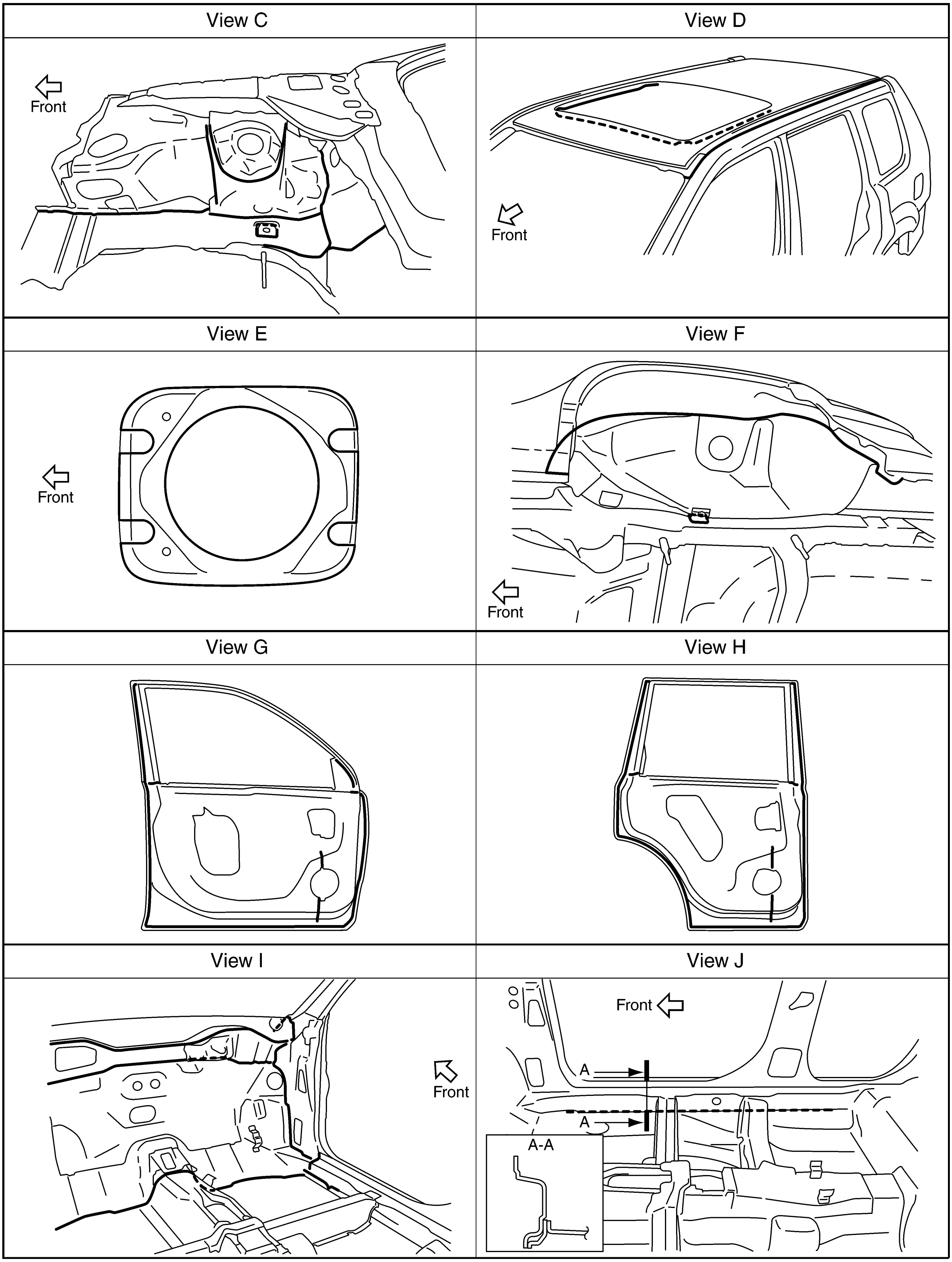
View C
Front
View D
Front
View E
Front
View F
Front
View G
View H
View I
Front
View J
Front
A
A
A-A

SIIA2419E

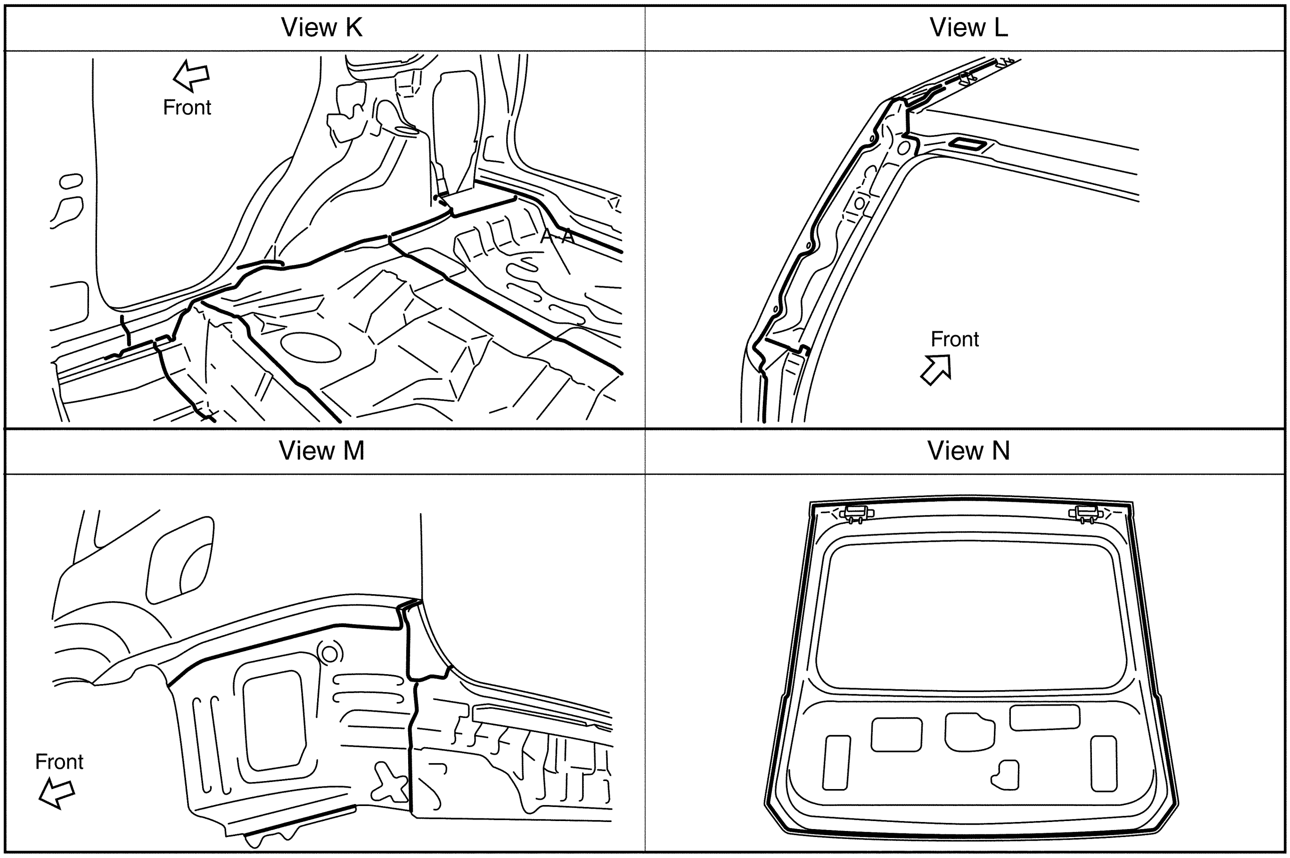

PIIA0393E

Body Construction

AIS0063N

BODY CONSTRUCTION

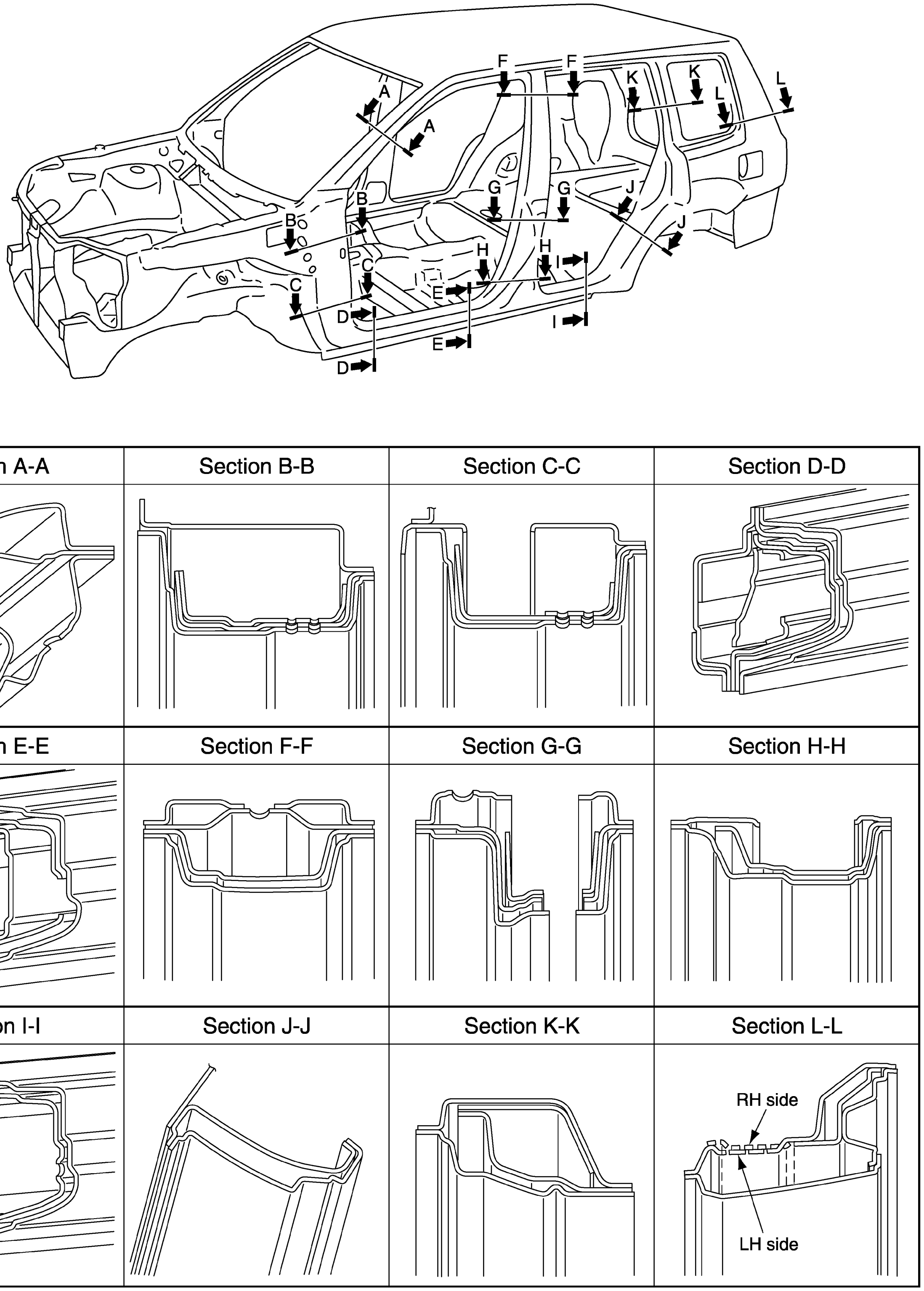

PIIA0394E

Body Alignment

AIS0063O

BODY CENTER MARKS

A mark has been placed on each part of the body to indicate the vehicle center. When repairing parts damaged by an accident which might affect the vehicle frame (members, pillars, etc.), more accurate and effective repair will be possible by using these marks together with body alignment specifications.

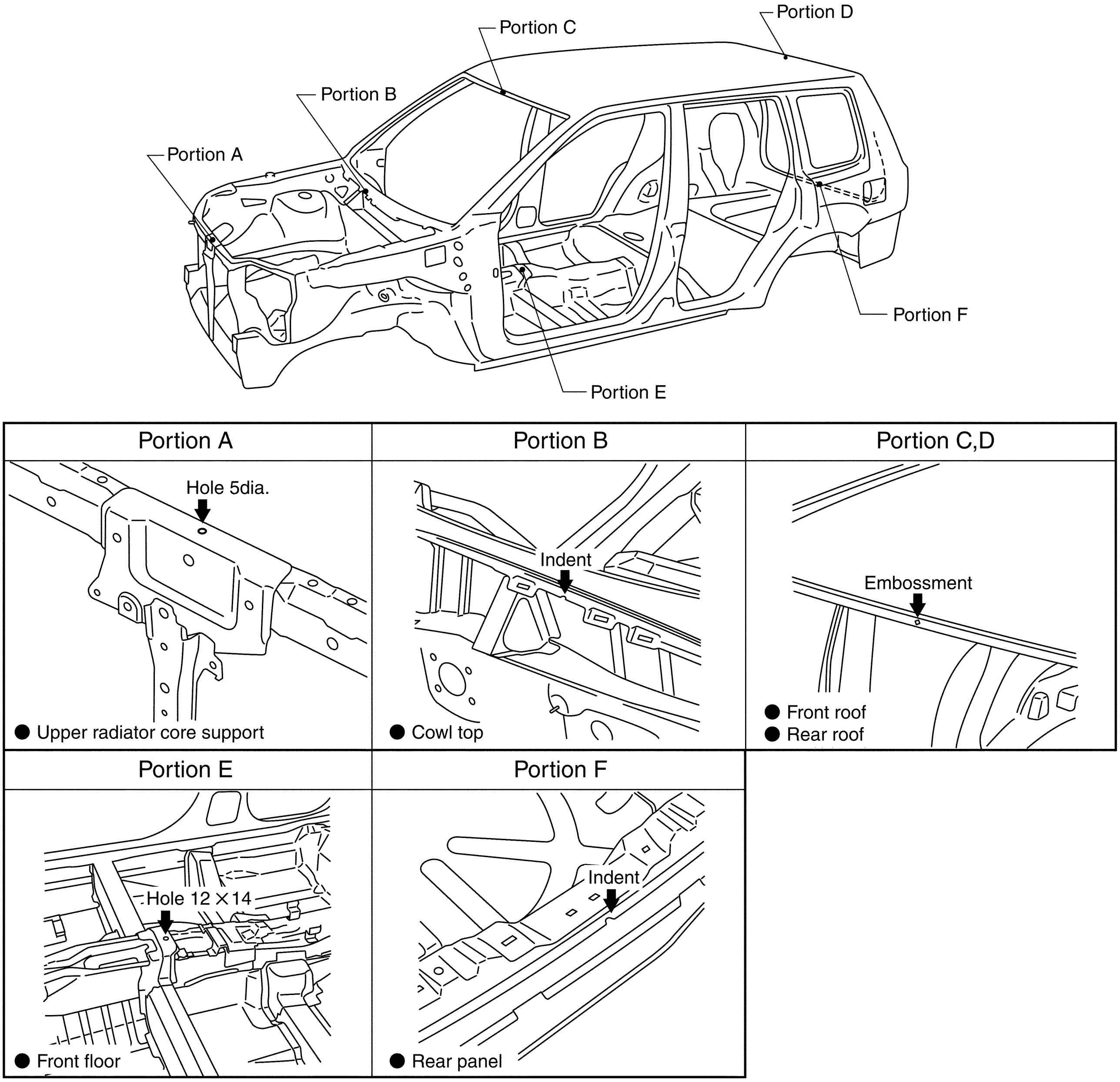

PIIA0395E

PANEL PARTS MATCHING MARKS

A mark has been placed on each body panel to indicate the parts matching positions. When repairing parts damaged by an accident which might affect the vehicle structure (members, pillars, etc.), more accurate and effective repair will be possible by using these marks together with body alignment specifications.

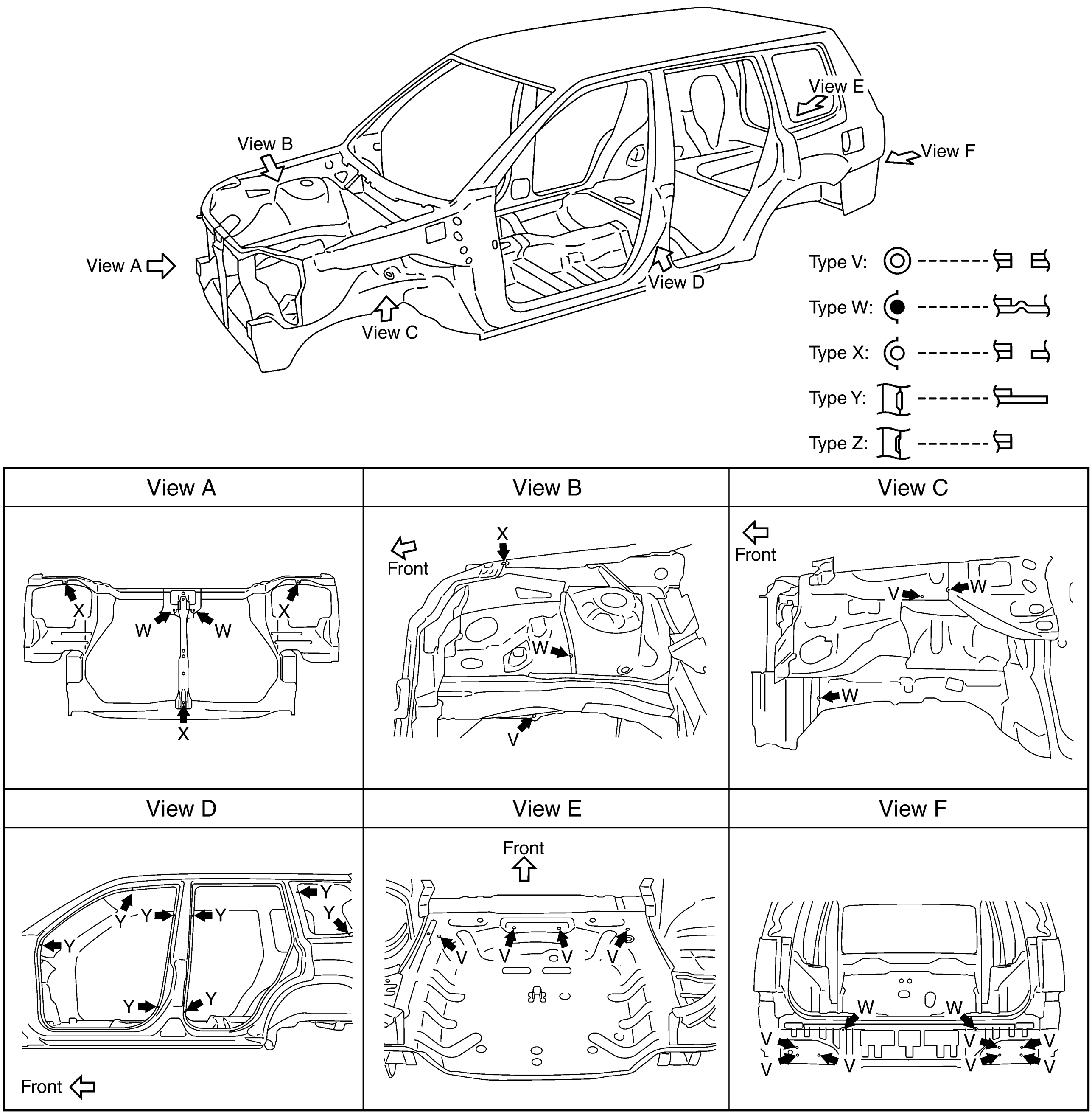

SIIA2420E

DESCRIPTION

- All dimensions indicated in the figures are actual.
- When using a tracking gauge, adjust both pointers to equal length. Then check the pointers and gauge itself to make sure there is no free play.
- When a measuring tape is used, check to be sure there is no elongation, twisting or bending.
- Measurements should be taken at the center of the mounting holes.
- An asterisk (*) following the value at the measuring point indicates that the measuring point on the other side is symmetrically the same value.
- The coordinates of the measurement points are the distances measured from the standard line of ″X″, ″Y″ and ″Z″.

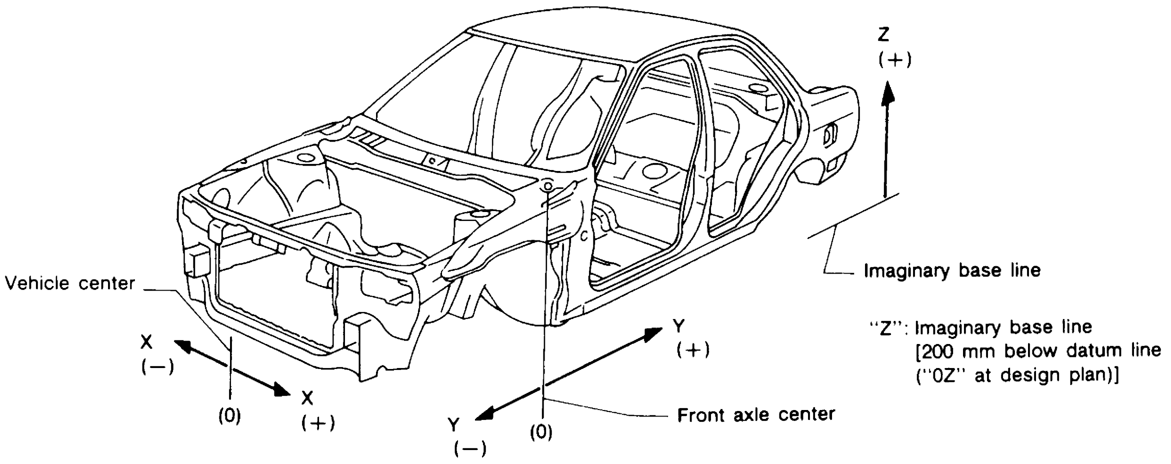

PIIA0104E

ENGINE COMPARTMENT

Measurement

Figures marked with a (*) indicate symmetrically identical dimensions on both right and left hand sides of the vehicle.

Unit : mm

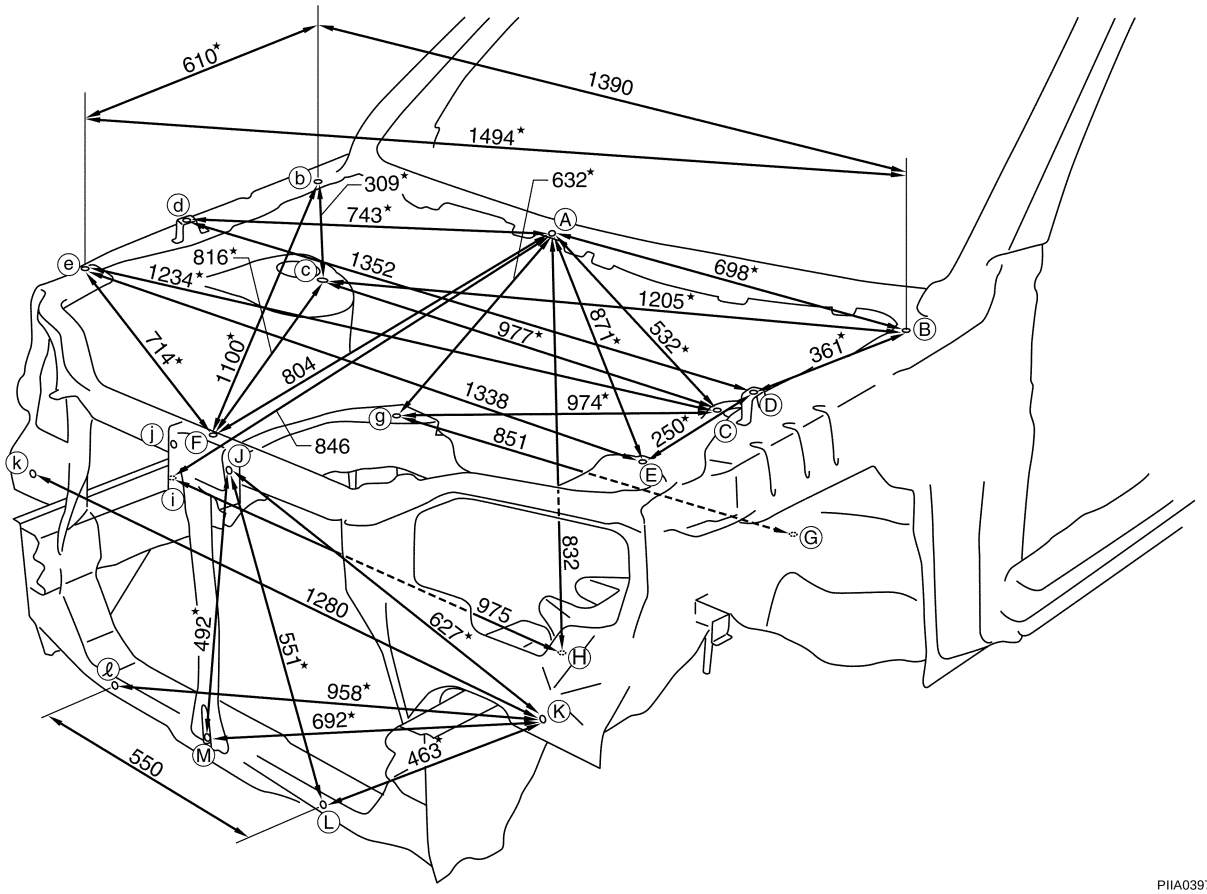

PIIA0397E

Measurement Points

(A) : Cowl top indent of center positioning mark

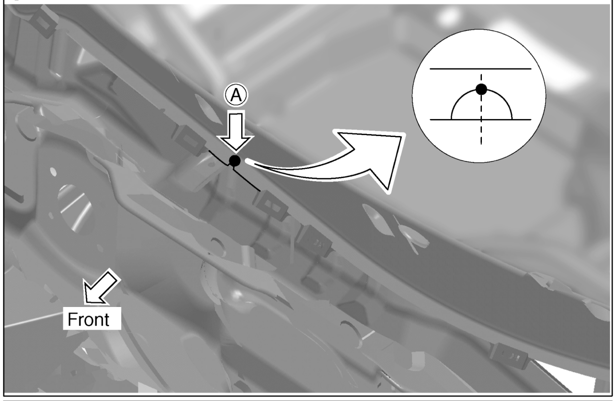

(B),(b) : Rear hoodledge reinforcement hole center (5dia.)
(C),(c) : Front suspension installing hole center (11dia.)
(D),(d) : Front fender installing hole center (7dia.)

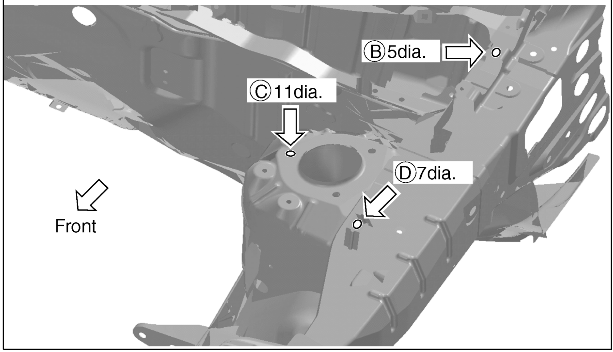

(E),(e) : Front fender installing hole center (7dia.)
(K),(k) : Side radiator core support hole center (12dia.)

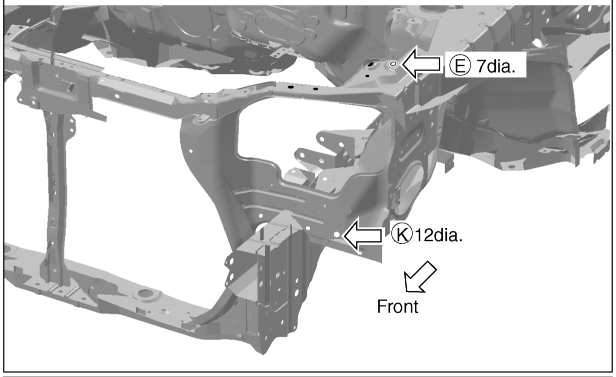

(F) : Upper radiator core support hole center of center positioning mark (5dia.)
(J),(j) : Hood lock installing hole center (9dia.)

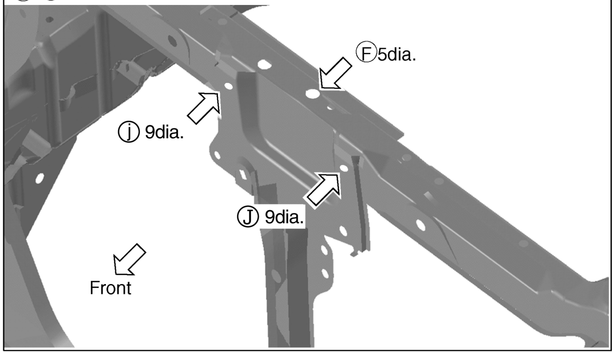

(G) : ABS installing hole center (8dia.)
(H) : Battery mounting bracket installing hole center (11dia.)

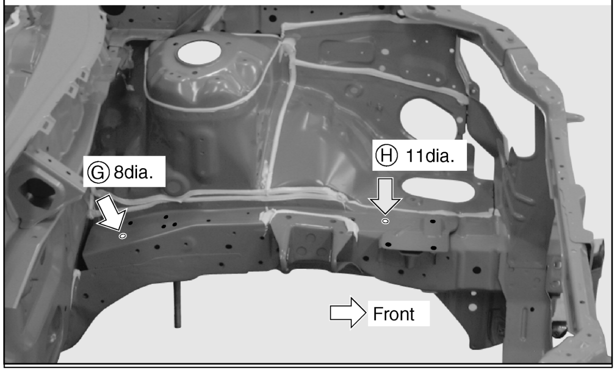

(g) , (i): Front side member hole center ((g):8dia. ,(i):11dia.)

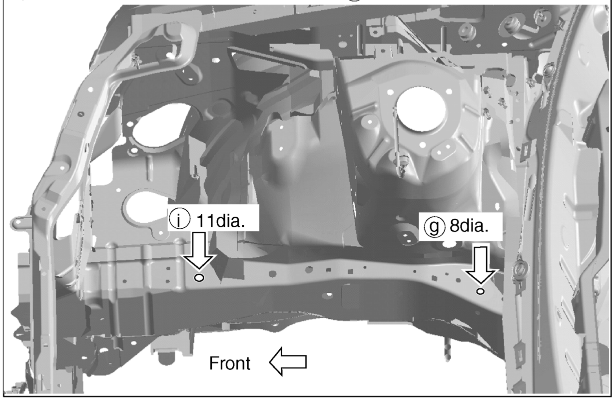

(L), (ℓ) : Lower radiator core support hole center (12dia.)
(M): Hood lock stay hole center of center positioning mark (8dia.)

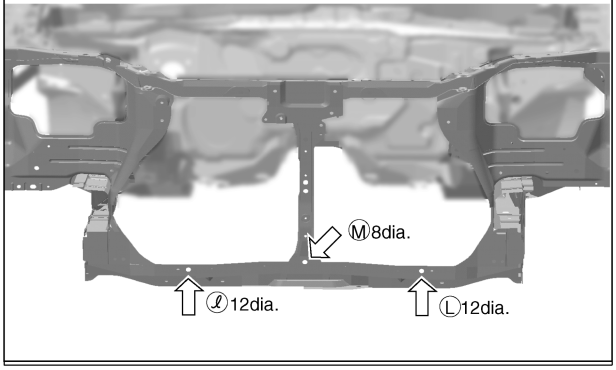

SIIA2421E

UNDERBODY

Measurement

Unit : mm

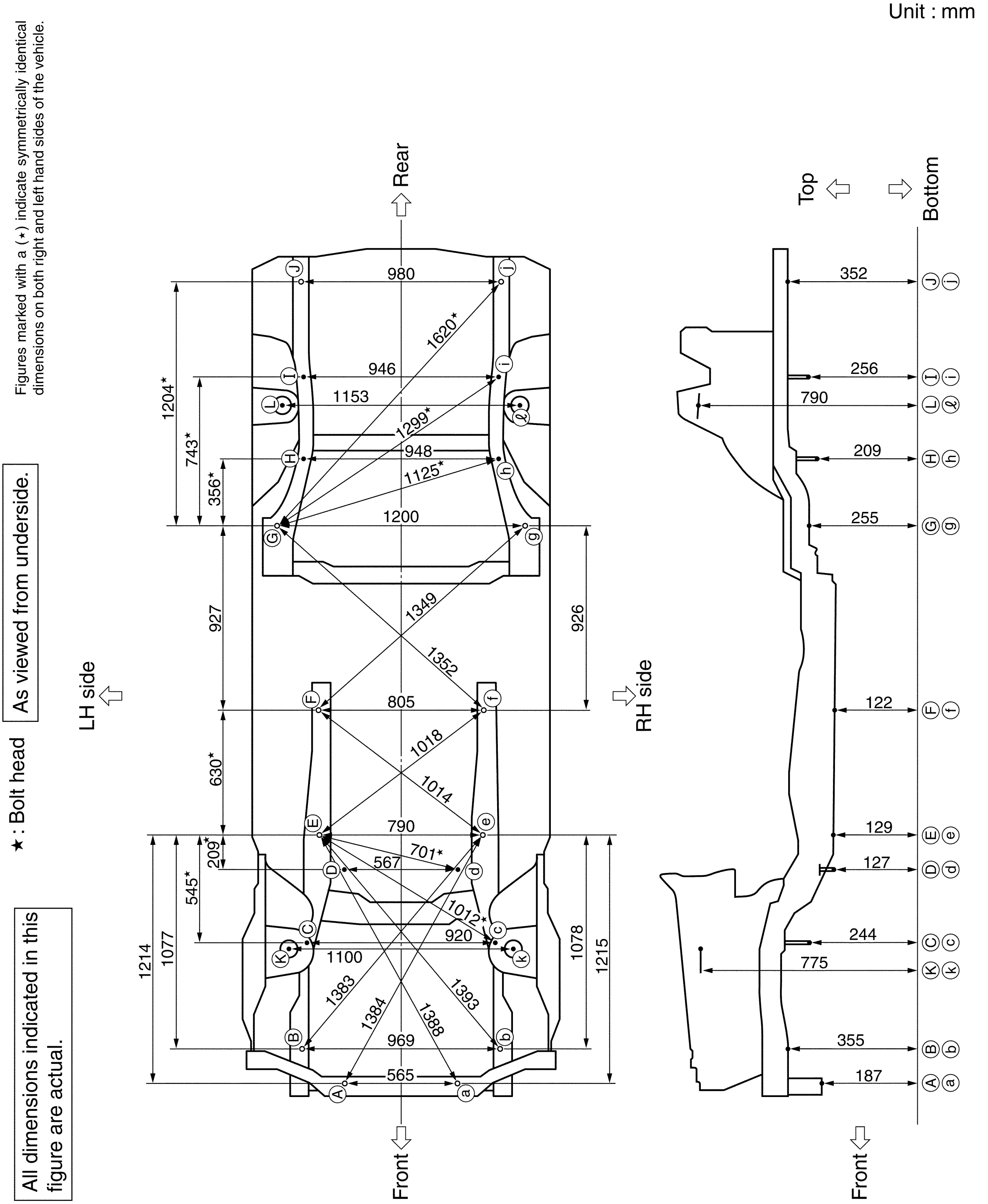

PIIA0399E

Measurement Points

Unit : mm

As viewed from underside.

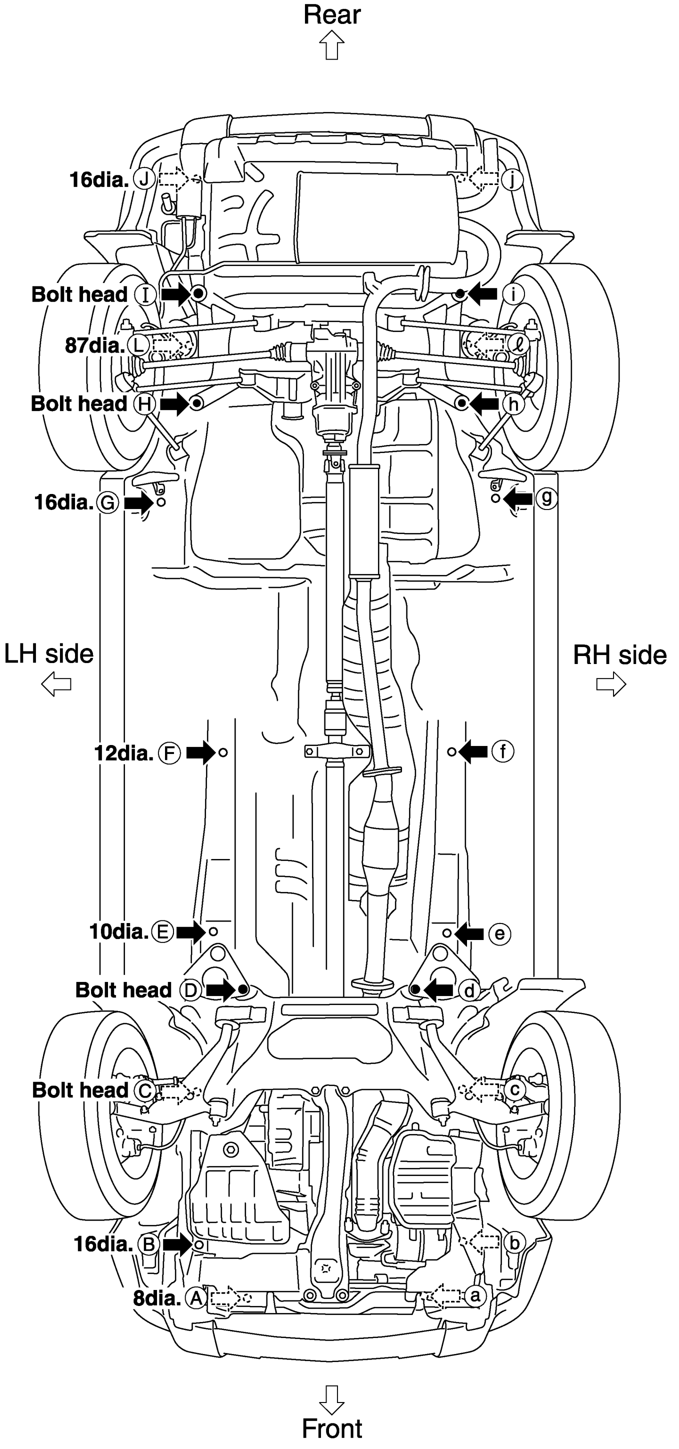

Coordinates:

Ⓐ
X:280
Y:-607
Z:187

ⓐ
X:-285
Y:-609
Z:187

Ⓑ
X:477
Y:-450
Z:355

ⓑ
X:-492
Y:-450
Z:355

Ⓒ,ⓒ
X:460
Y:72
Z:244

Ⓓ,ⓓ
X:284
Y:423
Z:127

Ⓔ,ⓔ
X:395
Y:600
Z:129

Ⓕ
X:400
Y:1230
Z:122

ⓕ
X:-405
Y:1230
Z:122

Ⓖ,ⓖ
X:600
Y:2125
Z:255

Ⓗ,ⓗ
X:474
Y:2455
Z:209

Ⓘ,ⓘ
X:473
Y:2857
Z:256

Ⓙ,ⓙ
X:490
Y:3320
Z:352

Front and rear strut tower centers
Coordinates:

Ⓚ,ⓚ
X:550
Y:29
Z:775

Ⓛ,ⓛ
X:576
Y:2715
Z:790

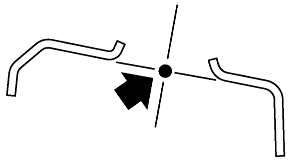

Front: Ⓚ,ⓚ **87dia**
Rear: Ⓛ,ⓛ **87dia**

PIIA0400E

PASSENGER COMPARTMENT

Measurement

Unit : mm

Figures marked with a (★) indicate symmetrically identical dimensions on both right and left hand sides of the vehicle.

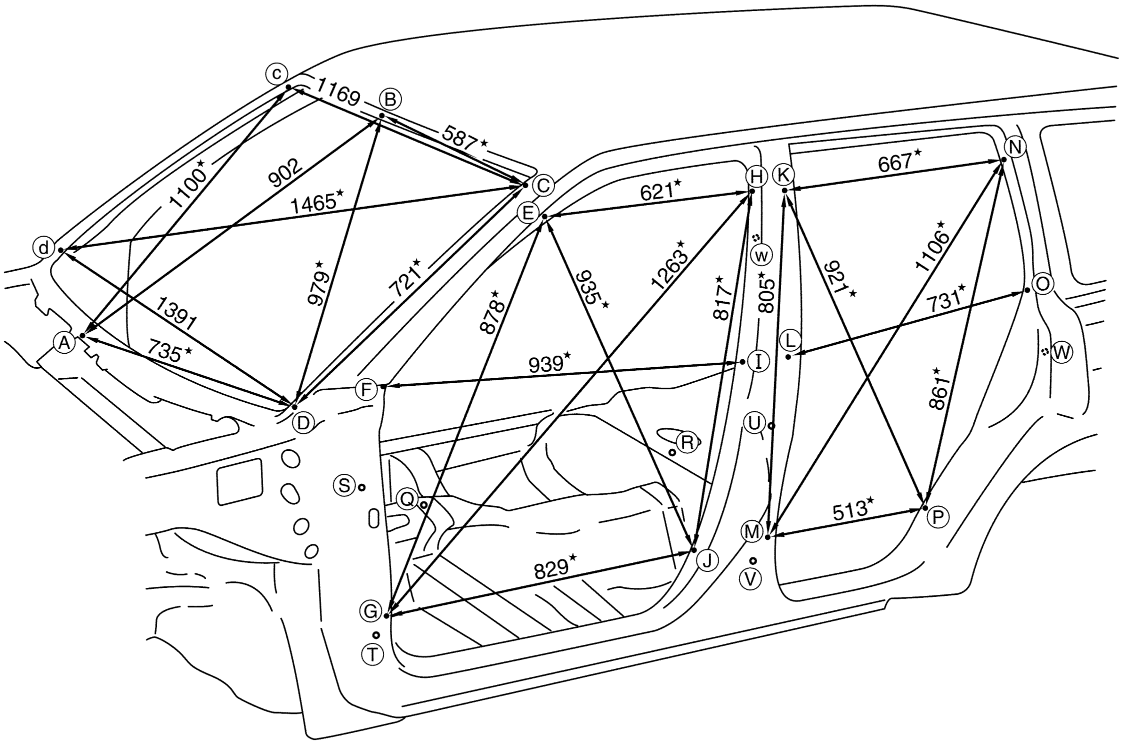

Point	Dimension	Point	Dimension	Point	Dimension
Ⓔ~ⓔ	1,317	Ⓜ~ⓟ	1,530★	Ⓡ~ⓜ	736
Ⓔ~ⓖ	1,632★	Ⓝ~ⓝ	1,296	Ⓡ~Ⓝ	1,225
Ⓔ~ⓗ	1,461★	Ⓝ~ⓟ	1,616★	Ⓡ~ⓝ	1,189
Ⓕ~ⓕ	1,435	Ⓞ~ⓞ	1,420	Ⓡ~Ⓞ	1,075
Ⓖ~ⓖ	1,437	Ⓟ~ⓟ	1,442	Ⓡ~ⓞ	1,030
Ⓖ~ⓗ	1,871★	Ⓠ~Ⓔ	1,117★	Ⓡ~Ⓟ	800
Ⓖ~ⓙ	1,661★	Ⓠ~Ⓕ	1,059★	Ⓡ~ⓟ	738
Ⓗ~ⓗ	1,328	Ⓠ~Ⓖ	874★	Ⓡ~Ⓦ	1,059
Ⓗ~ⓙ	1,607★	Ⓠ~Ⓗ	1,213★	Ⓡ~ⓦ	1,022
Ⓘ~ⓘ	1,456	Ⓠ~Ⓘ	1,053★	Ⓢ~Ⓤ	1,079★
Ⓙ~ⓙ	1,442	Ⓠ~Ⓙ	802★	Ⓢ~Ⓥ	1,111★
Ⓚ~ⓚ	1,327	Ⓡ~Ⓚ	1,132	Ⓣ~Ⓤ	1,102★
Ⓚ~ⓝ	1,471★	Ⓡ~ⓚ	1,092	Ⓣ~Ⓥ	1,028★
Ⓚ~ⓟ	1,662★	Ⓡ~Ⓛ	988	Ⓦ~ⓦ	1,152
Ⓛ~ⓛ	1,456	Ⓡ~ⓛ	938		
Ⓜ~ⓜ	1,442	Ⓡ~Ⓜ	799		

PIIA0401E

Measurement Points

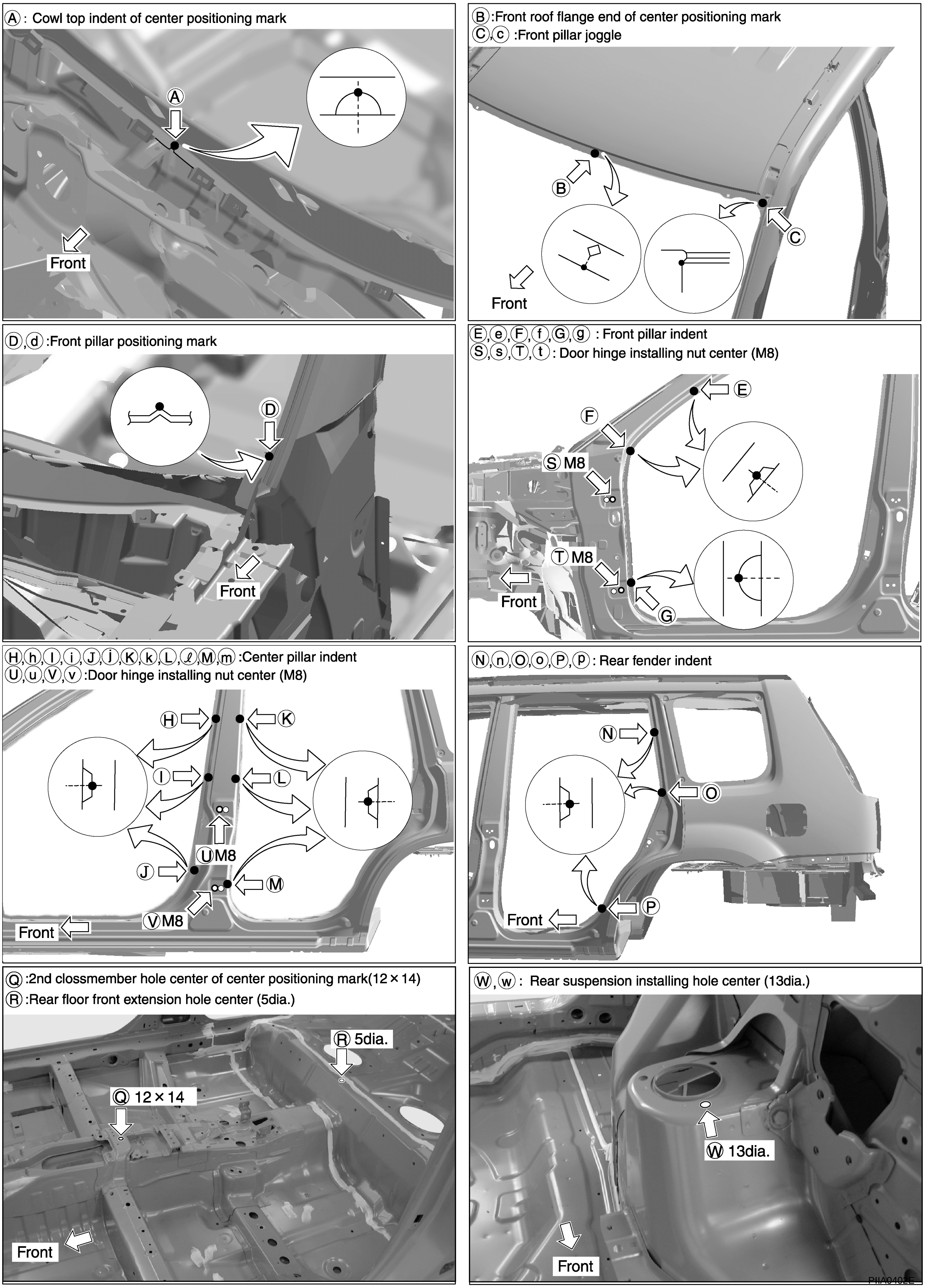

REAR BODY

Measurement

Figures marked with a (⋆) indicate symmetrically identical dimensions on both right and left hand sides of the vehicle.

Unit : mm

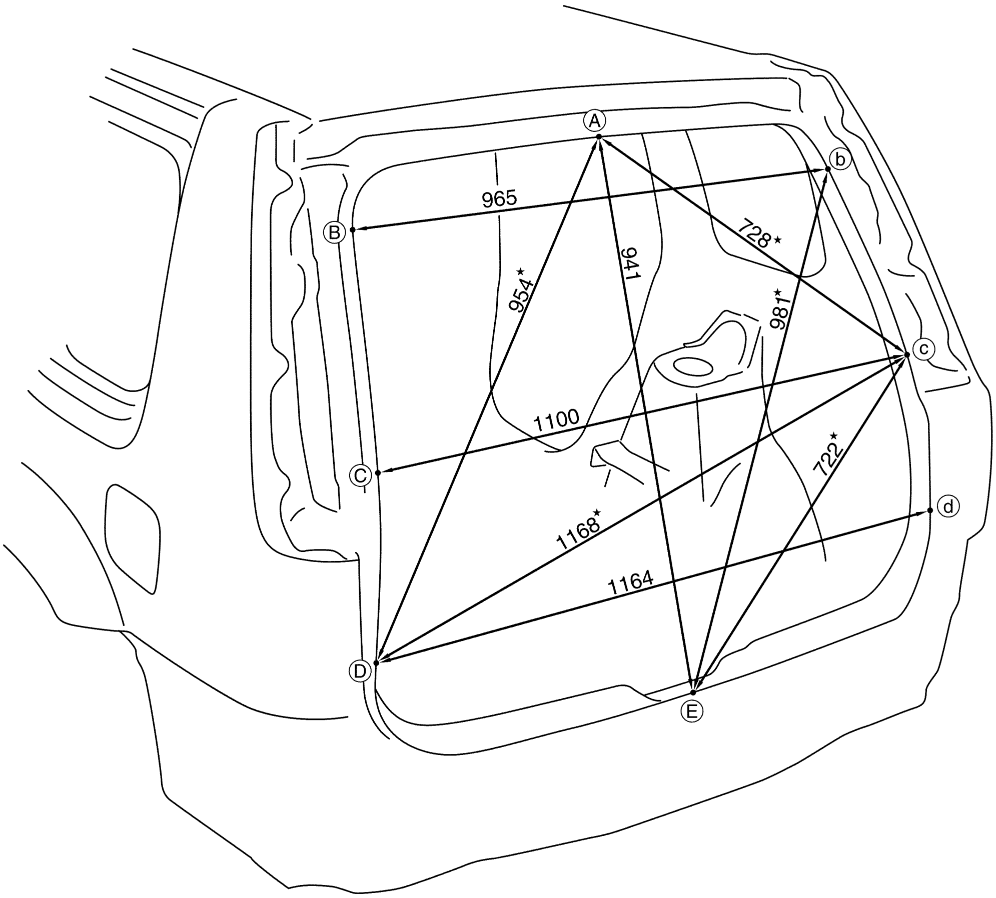

PIIA0403E

Measurement Points

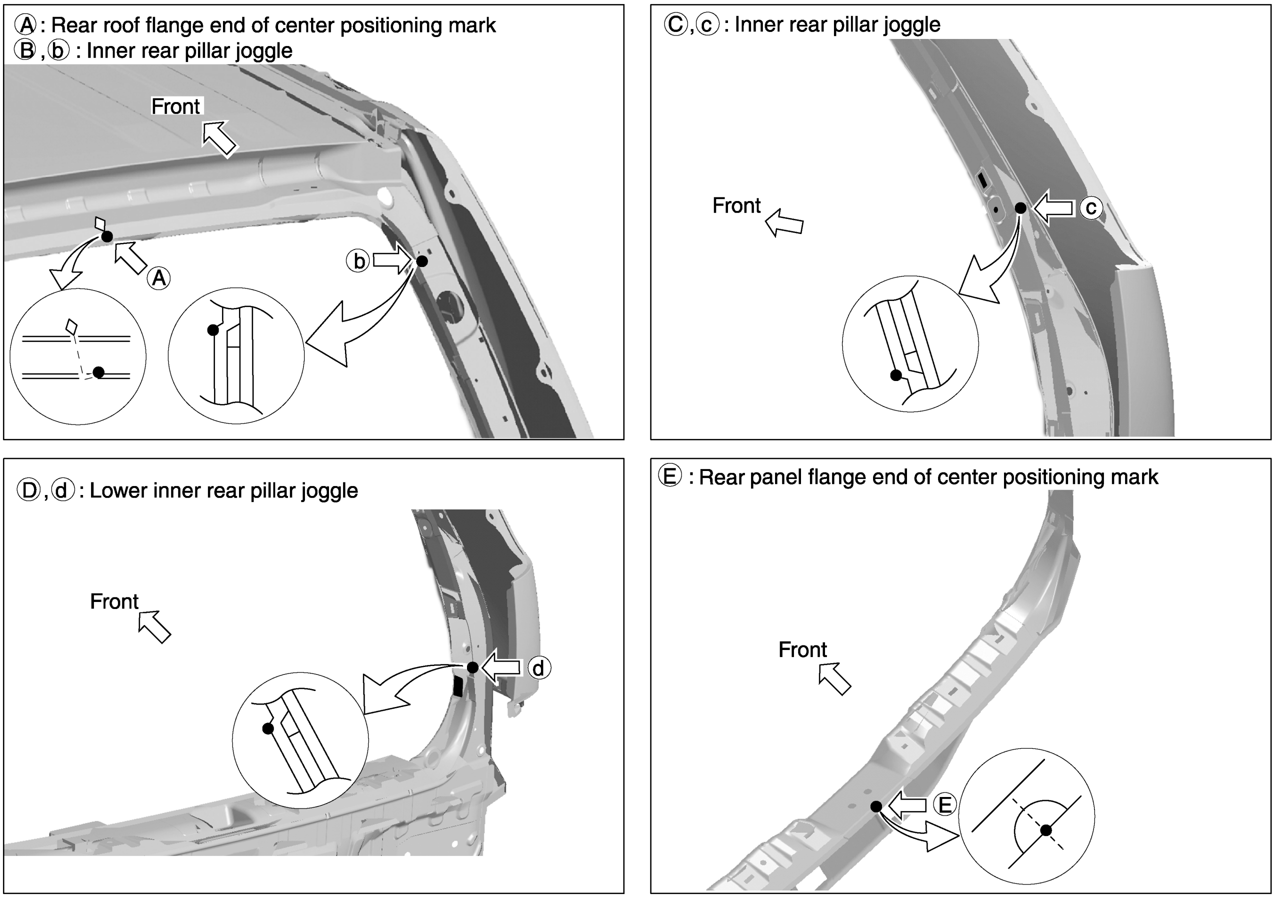

PIIA0404E

Handling Precautions for Plastics

AIS0063P

HANDLING PRECAUTIONS FOR PLASTICS

Abbre-viation	Material name	Heat resisting temperature °C(°F)	Resistance to gasoline and solvents	Other cautions
PE	Polyethylene	60(140)	Gasoline and most solvents are harmless if applied for a very short time (wipe up quickly).	Flammable
PVC	Polyvinyl Chloride	80(176)	Same as above.	Poison gas is emitted when burned.
EPM/ EPDM	Ethylene Propylene (Diene) rubber	80(176)	Same as above.	Flammable
TPO/ TPR	Thermoplastic Olefine/ Thermoplastic Rubber	80(176)	Same as above.	Flammable
PP	Polypropylene	90(194)	Same as above.	Flammable, avoid battery acid.
UP	Polyester thermoset	90(194)	Same as above.	Flammable
PS	Polystyrene	80(176)	Avoid solvents.	Flammable
ABS	Acrylonitrile Butadiene Styrene resin	80(176)	Avoid gasoline and solvents.	
AES	Acrylonitrile Ethylene Styrene	80(176)	Same as above.	
PMMA	Polymethyl Methacrylate	85(185)	Same as above.	
AAS	Acrylonitrile Acrylic Styrene	85(185)	Same as above.	
AS	Acrylonitrile Styrene	85(185)	Same as above.	
EVA	Polyvinyl Ethyl Acetate	90(194)	Same as above.	
ASA	Acrylonitrile Styrene Acrylate	100(222)	Same as above.	Flammable
PPO/ PPE	Polyphenylene Oxide/ Polyphenylene Ether	110(230)	Same as above.	
PC	Polycarbonate	120(248)	Same as above.	
PAR	Polyacrylate	180(356)	Same as above.	
L-LDPE	Lenear Low Density PE	45(100)	Gasoline and most solvents are harmless.	Flammable
PUR	Polyurethane	90(194)	Same as above.	
TPU	Thermoplastic Urethane	110(230)	Same as above.	
PPC	Polypropylene Composite	115(239)	Same as above.	Flammable
POM	Polyacetal	120(248)	Same as above.	Avoid battery acid.
PBT+PC	Polybutylene Terephthalate+Polycarbonate	120(248)	Same as above.	Flammable
PA	Polyamide (Nylon)	140(284)	Same as above.	Avoid immersing in water.
PBT	Polybutylene Terephthalate	140(284)	Same as above.	
FRP	Fiber Reinforced Plastics	170(338)	Same as above.	Avoid battery acid.
PET	Polyethylene Terephthalate	180(356)	Same as above.	
PEI	Polyetherimide	200(392)	Same as above.	

1. When repairing and painting a portion of the body adjacent to plastic parts, consider their characteristics (influence of heat and solvent) and remove them if necessary or take suitable measures to protect them.
2. Plastic parts should be repaired and painted using methods suiting the materials' characteristics.

LOCATION OF PLASTIC PARTS

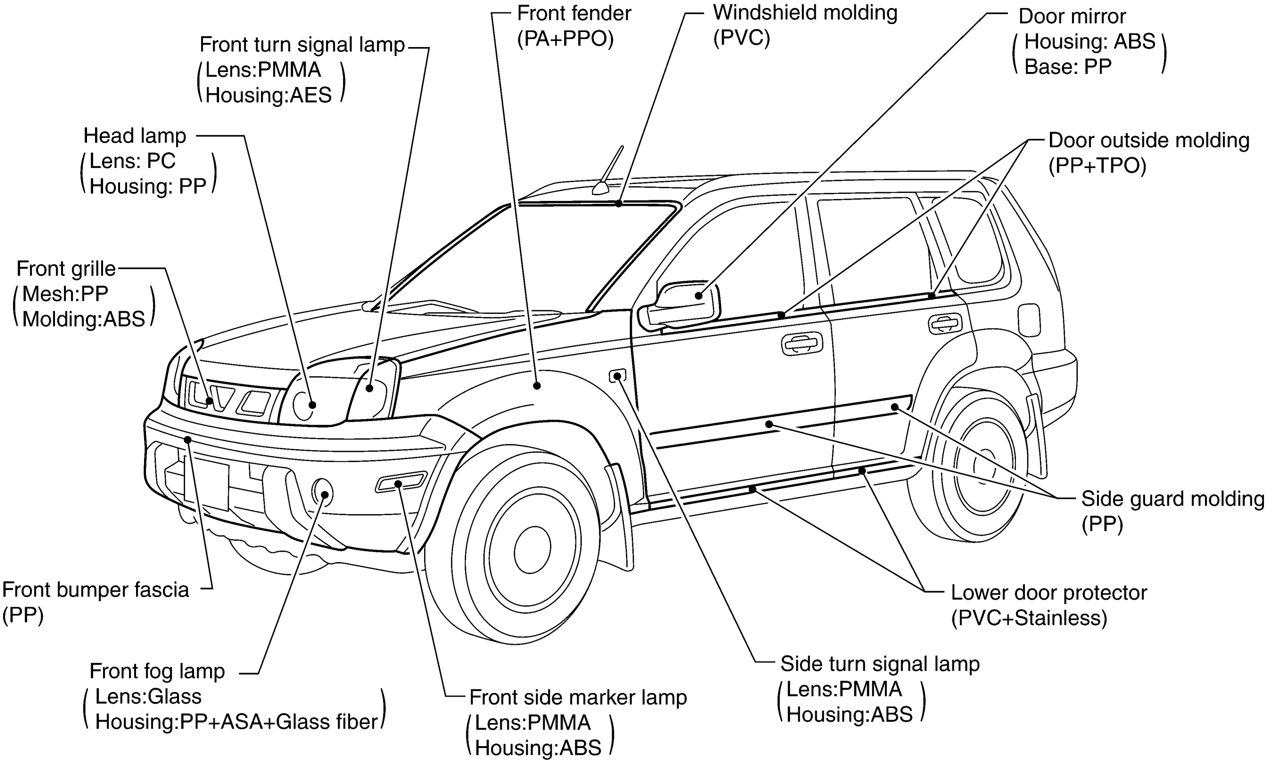

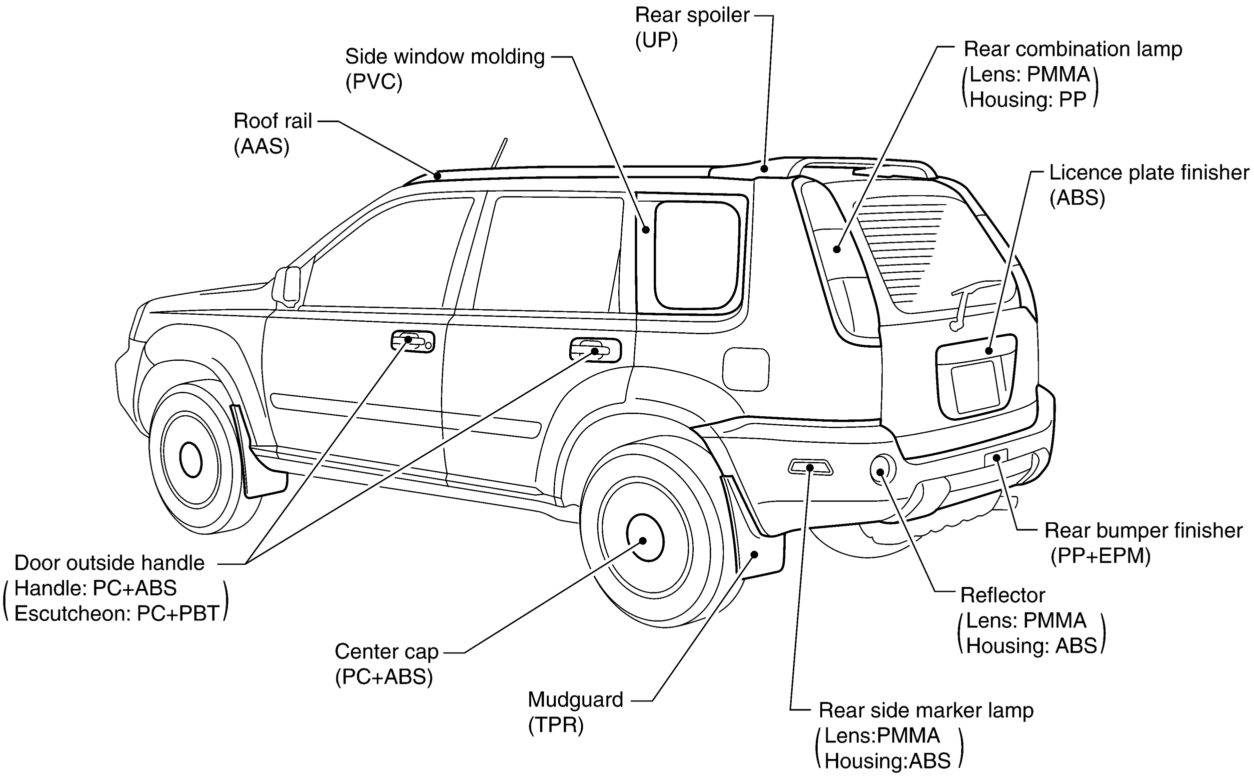

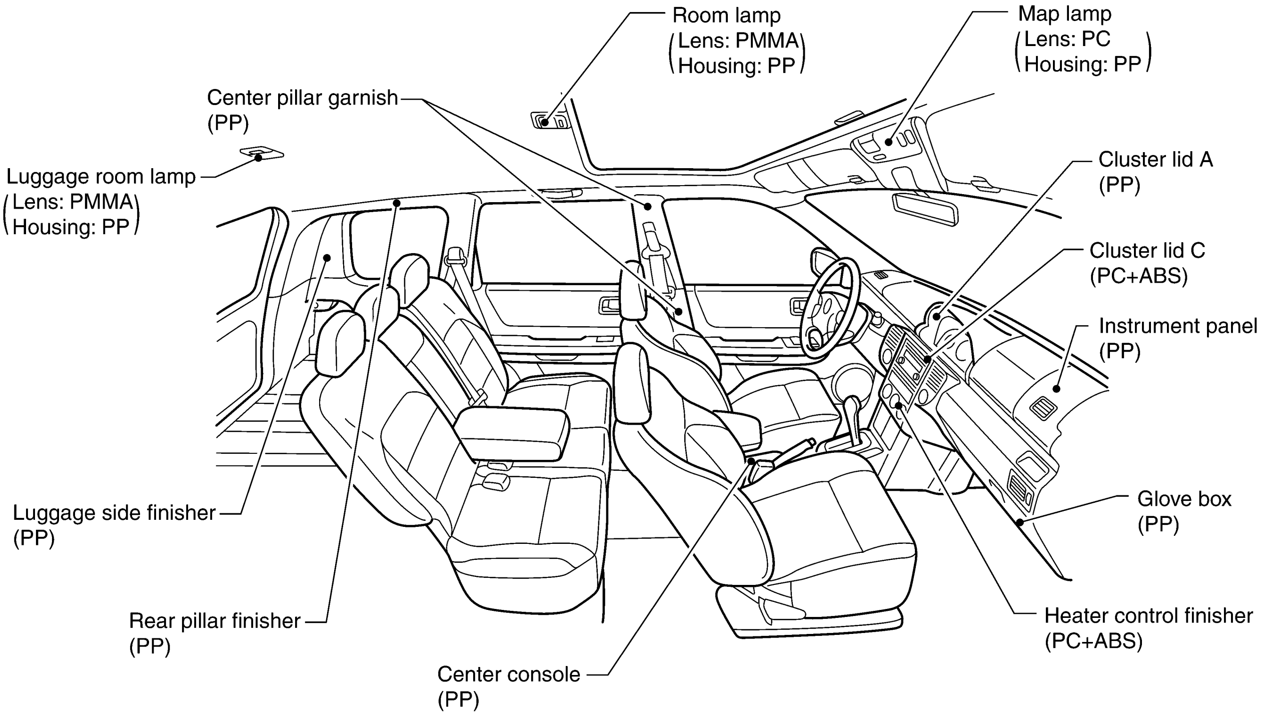
Room lamp
(Lens: PMMA
Housing: PP)
Map lamp
(Lens: PC
Housing: PP)
Center pillar garnish
(PP)
Luggage room lamp
(Lens: PMMA
Housing: PP)
Cluster lid A
(PP)
Cluster lid C
(PC+ABS)
Instrument panel
(PP)
Luggage side finisher
(PP)
Glove box
(PP)
Heater control finisher
(PC+ABS)
Rear pillar finisher
(PP)
Center console
(PP)
SIIA2423E

Precautions in Repairing High Strength Steel

AIS0063Q

High strength steel is used for body panels in order to reduce vehicle weight.
Accordingly, precautions in repairing automotive bodies made of high strength steel are described below:

HIGH STRENGTH STEEL (HSS) USED IN NISSAN VEHICLES

Tensile strength	Nissan/Infiniti designation	Major applicable parts
373 N/mm^2 (38 kg/mm^2 ,54klb/sq in)	SP130	● Front side member assembly ● Pillar hinge brace assembly ● Front & center pillar assembly ● Rear side member assembly ● Other reinforcements
785-981 N/mm^2 (80-100 kg/mm^2 114-142klb/sq in)	SP150	● Front bumper inner center reinforcement

SP130 is the most commonly used HSS.
SP150 HSS is used only on parts that require much more strength.

Read the Following Precautions When Repairing HSS:

1. Additional points to consider

- The repair of reinforcements (such as side members) by heating is not recommended since it may weaken the component. When heating is unavoidable, do not heat HSS parts above 550°C (1,022°F).
  Verify heating temperature with a thermometer.
  (Crayon-type and other similar type thermometer are appropriate.)

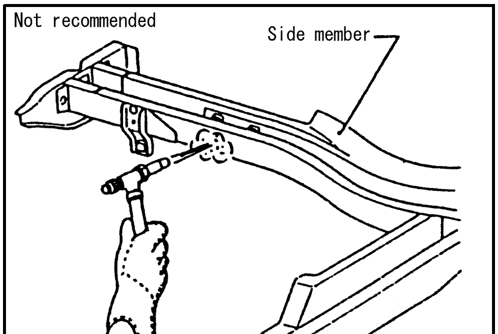

PIIA0115E

- When straightening body panels, use caution in pulling any HSS panel. Because HSS is very strong, pulling may cause deformation in adjacent portions of the body. In this case, increase the number of measuring points, and carefully pull the HSS panel.

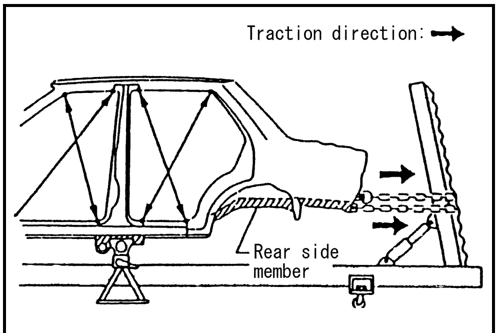

PIIA0116E

- When cutting HSS panels, avoid gas (torch) cutting if possible. Instead, use a saw to avoid weakening surrounding areas due to heat. If gas (torch) cutting is unavoidable, allow a minimum margin of 50 mm (1.97in).

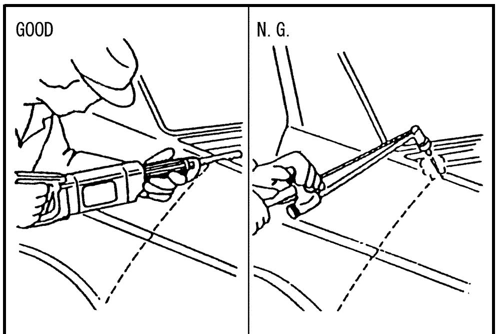

PIIA0117E

- When welding HSS panels, use spot welding whenever possible in order to minimize weakening surrounding areas due to heat.
  If spot welding is impossible, use M.I.G. welding. Do not use gas (torch) welding because it is inferior in welding strength.

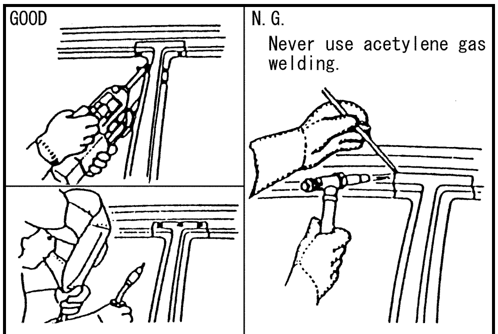

PIIA0144E

- The spot weld on HSS panels is harder than that of an ordinary steel panel.
  Therefore, when cutting spot welds on a HSS panel, use a low speed high torque drill (1,000 to 1,200 rpm) to increase drill bit durability and facilitate the operation.
- SP150 HSS panels with a tensile strength of 785 to 981 N/mm^2 (80 to 100 kg/mm^2, 114 to 142 klb/sq in), used as reinforcement in the door guard beams, is too strong to repair. When these HSS parts are damaged, the outer panels also sustain substantial damage; therefore, the assembly parts must be replaced.

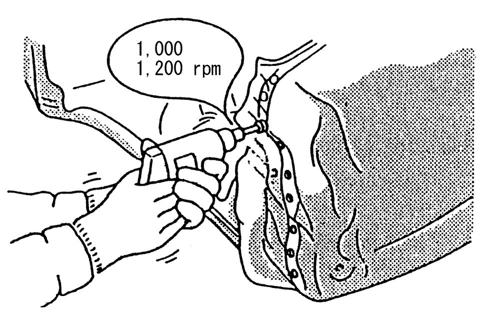

PIIA0145E

2. Precautions in spot welding HSS
   This work should be performed under standard working conditions. Always note the following when spot welding HSS:
   - The electrode tip diameter must be sized properly according to the metal thickness.

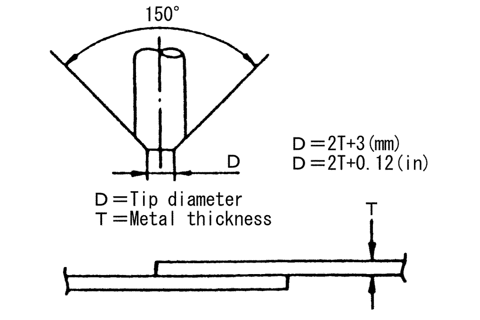

PIIA0146E

   - The panel surfaces must fit flush to each other, leaving no gaps.

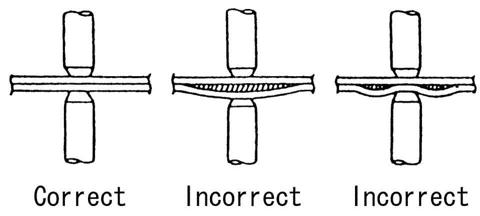

PIIA0147E

   - Follow the specifications for the proper welding pitch.

Unit:mm

Thickness (t)	Minimum pitch (l)
0.6 (0.024)	10 (0.39) or over
0.8 (0.031)	12 (0.47) or over
1.0 (0.039)	18 (0.71) or over
1.2 (0.047)	20 (0.79) or over
1.6 (0.063)	27 (1.06) or over
1.8 (0.071)	31 (1.22) or over

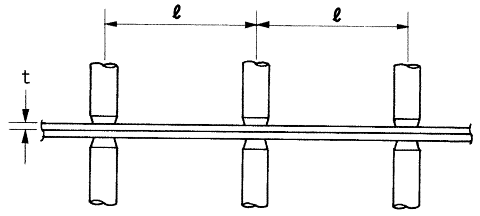

PIIA0148E

Replacement Operations

AIS0063R

DESCRIPTION

This section is prepared for technicians who have attained a high level of skill and experience in repairing collision-damaged vehicles and also use modern service tools and equipment. Persons unfamiliar with body repair techniques should not attempt to repair collision-damaged vehicles by using this section.

Technicians are also encouraged to read Body Repair Manual (Fundamentals) in order to ensure that the original functions and quality of the vehicle can be maintained. The Body Repair Manual (Fundamentals) contains additional information, including cautions and warning, that are not including in this manual. Technicians should refer to both manuals to ensure proper repairs.

Please note that these information are prepared for worldwide usage, and as such, certain procedures might not apply in some regions or countries.

The symbols used in this manual for cutting and welding / brazing operations are shown below.

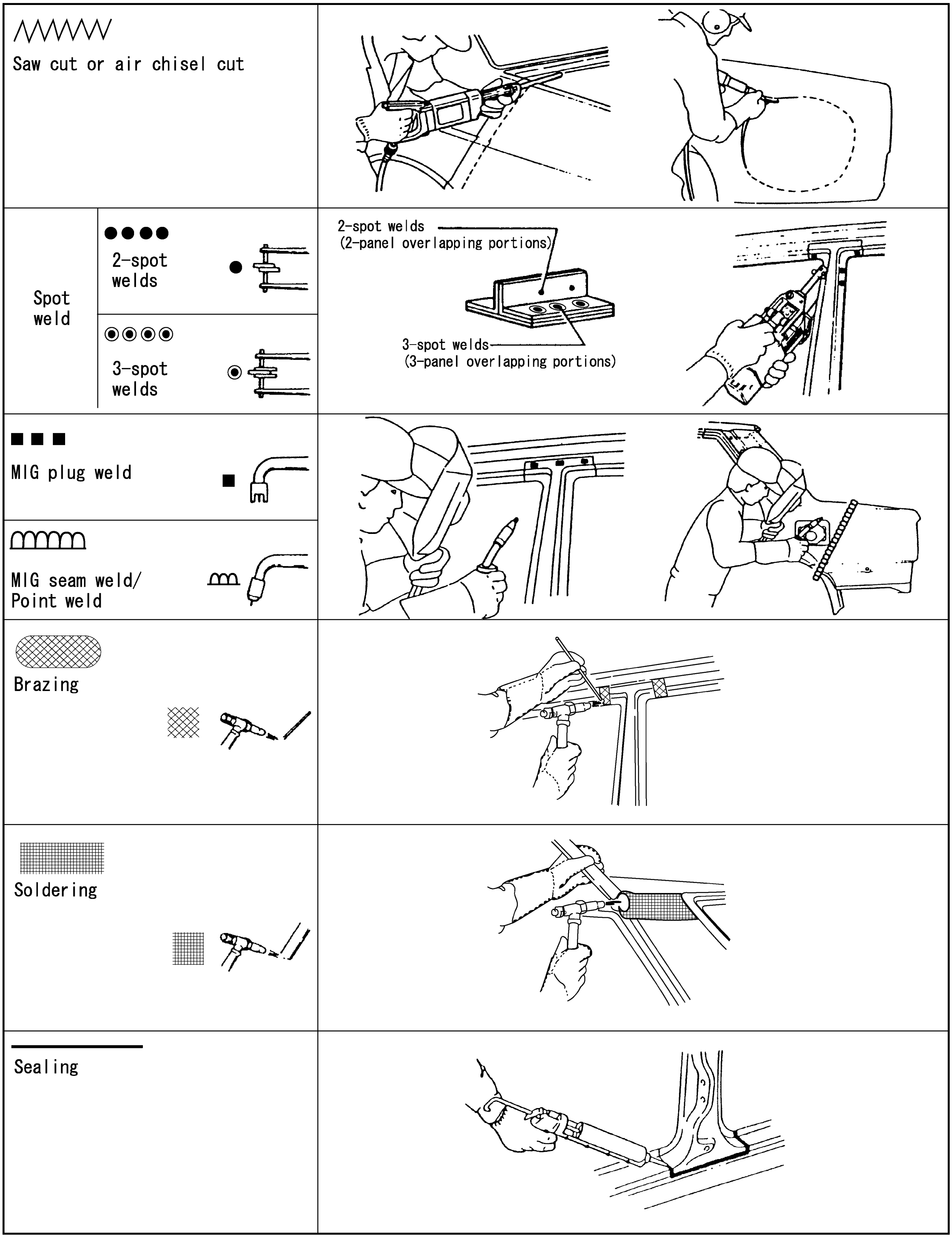

PIIA0149E

- Front pillar butt joint can be determined anywhere within shaded area as shown in the figure. The best location for the butt joint is at position A due to the construction of the vehicle. Refer to the front pillar section.

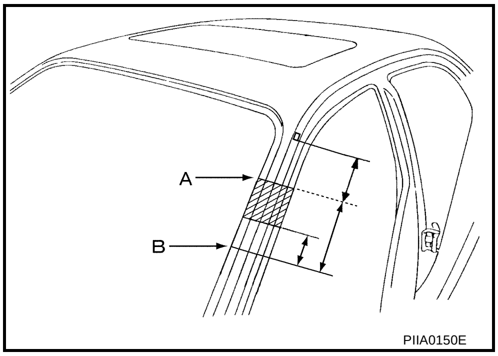

PIIA0150E

- Determine cutting position and record distance from the locating indent. Use this distance when cutting the service part. Cut outer front pillar over 60 mm above inner front pillar cut position.

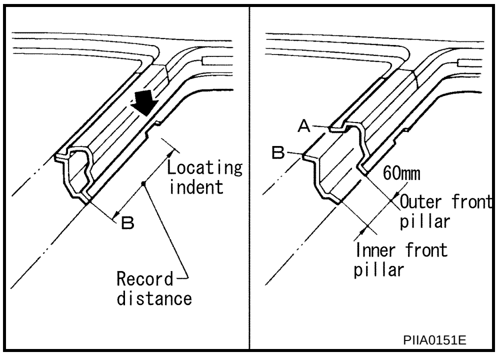

PIIA0151E

- Prepare a cutting jig to make outer pillar easier to cut. Also, this will permit service part to be accurately cut at joint position.

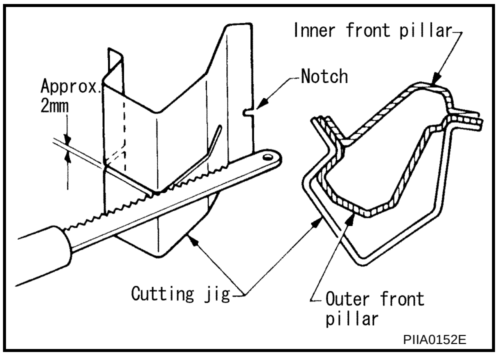

PIIA0152E

- An example of cutting operation using a cutting jig is as follows.

1. Mark cutting lines.
   A: Cut position of outer pillar
   B: Cut position of inner pillar
2. Align cutting line with notch on jig. Clamp jig to pillar.
3. Cut outer pillar along groove of jig. (At position A)
4. Remove jig and cut remaining portions.
5. Cut inner pillar at position B in same manner.

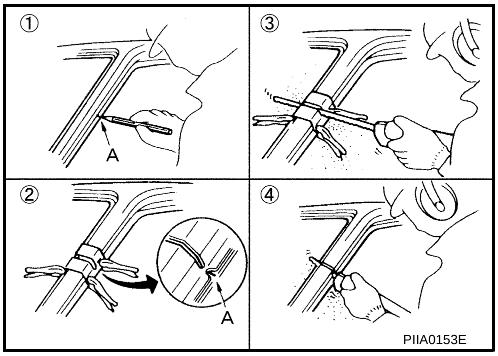

PIIA0153E

RADIATOR CORE SUPPORT

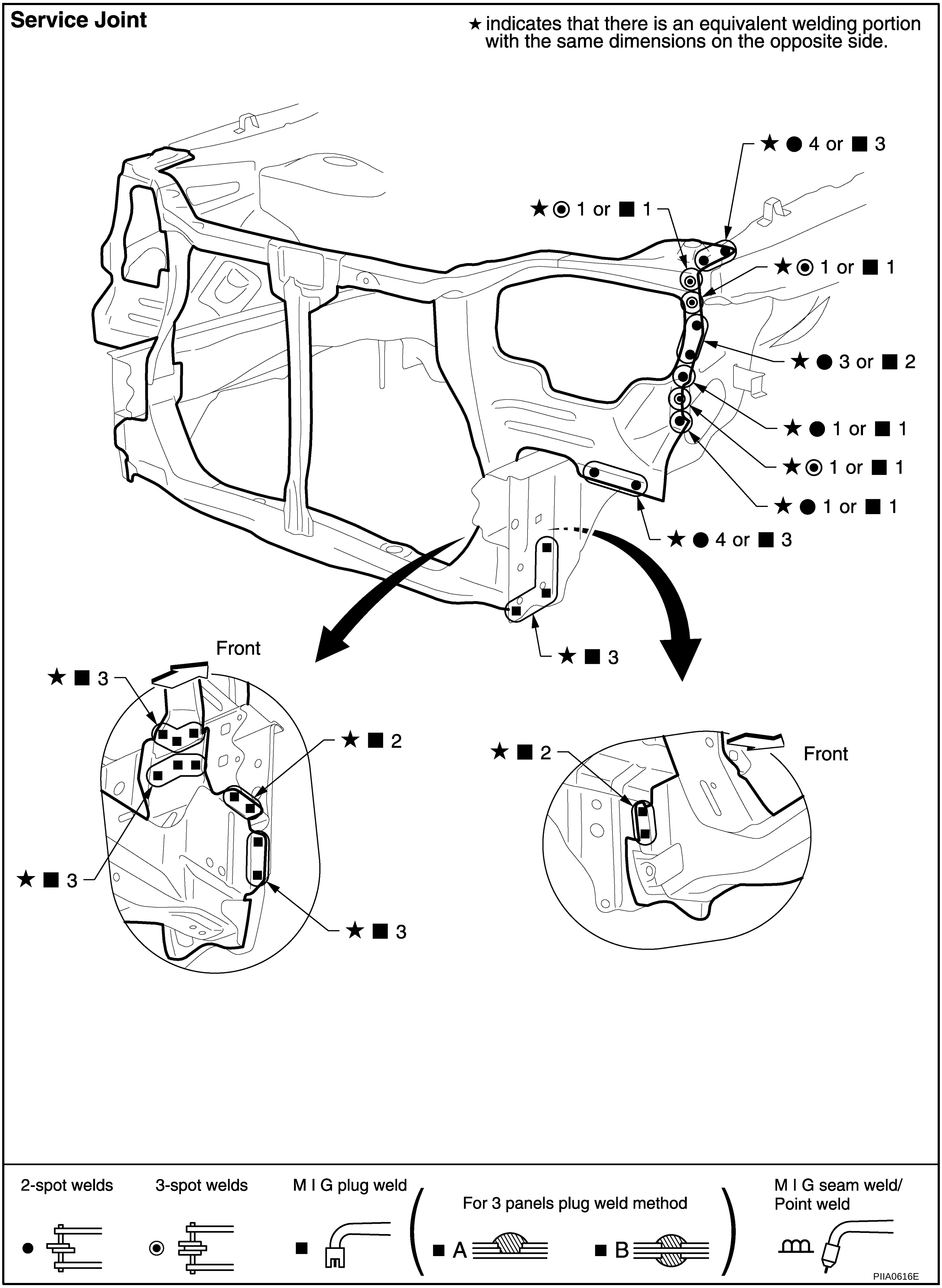

Change parts

- Radiator core support assembly

RADIATOR CORE SUPPORT (PARTIAL REPLACEMENT)

Service Joint

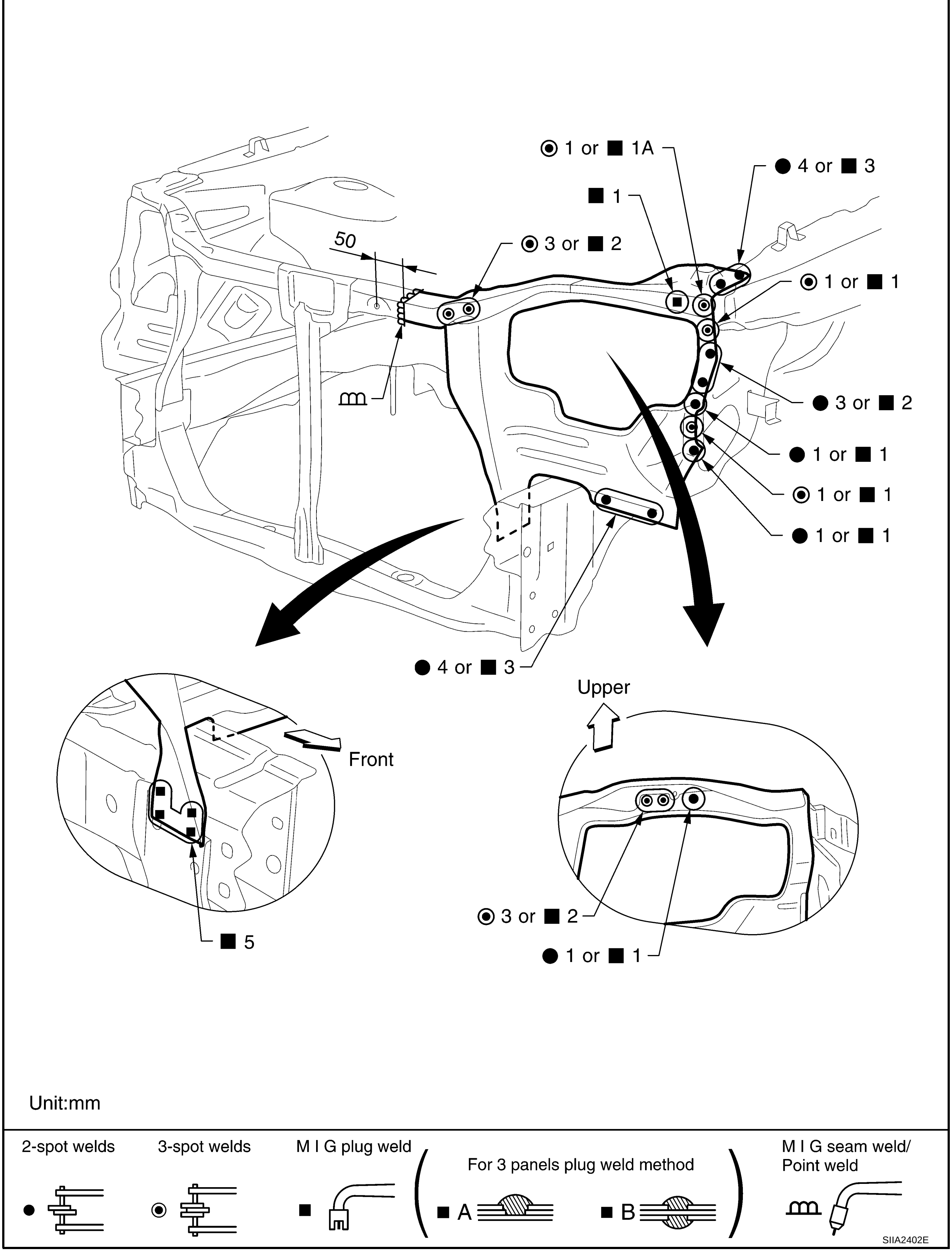

Change parts

- ● Upper radiator core support
- ● Side radiator core support (LH)

HOODLEDGE

- Work after radiator core support has been removed.

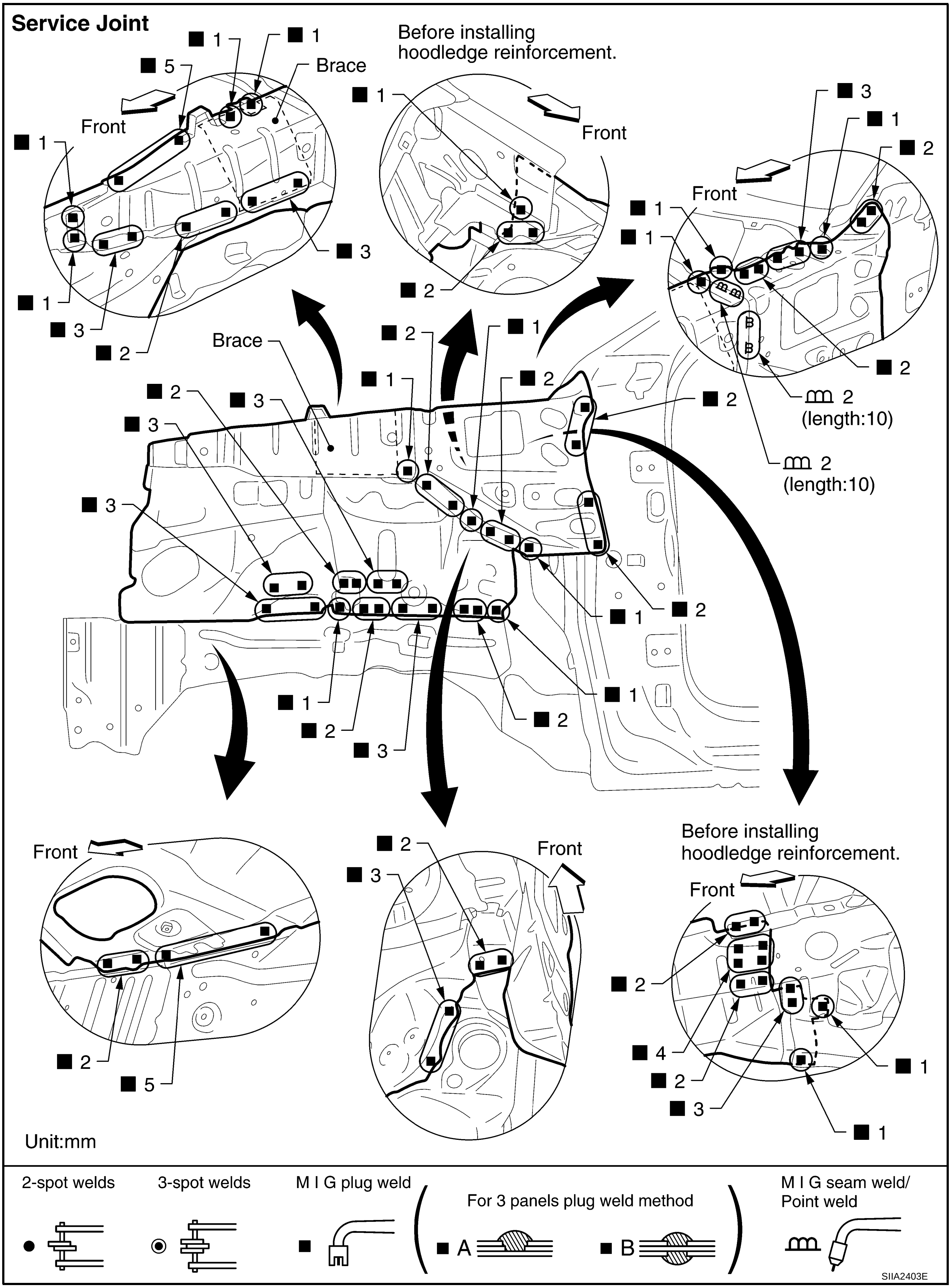

Change parts

- Hoodledge assembly (LH)
- Front hoodledge reinforcement (LH)
- Rear hoodledge reinforcement (LH)

HOODLEDGE (PARTIAL REPLACEMENT)

- Work after radiator core support has been removed.

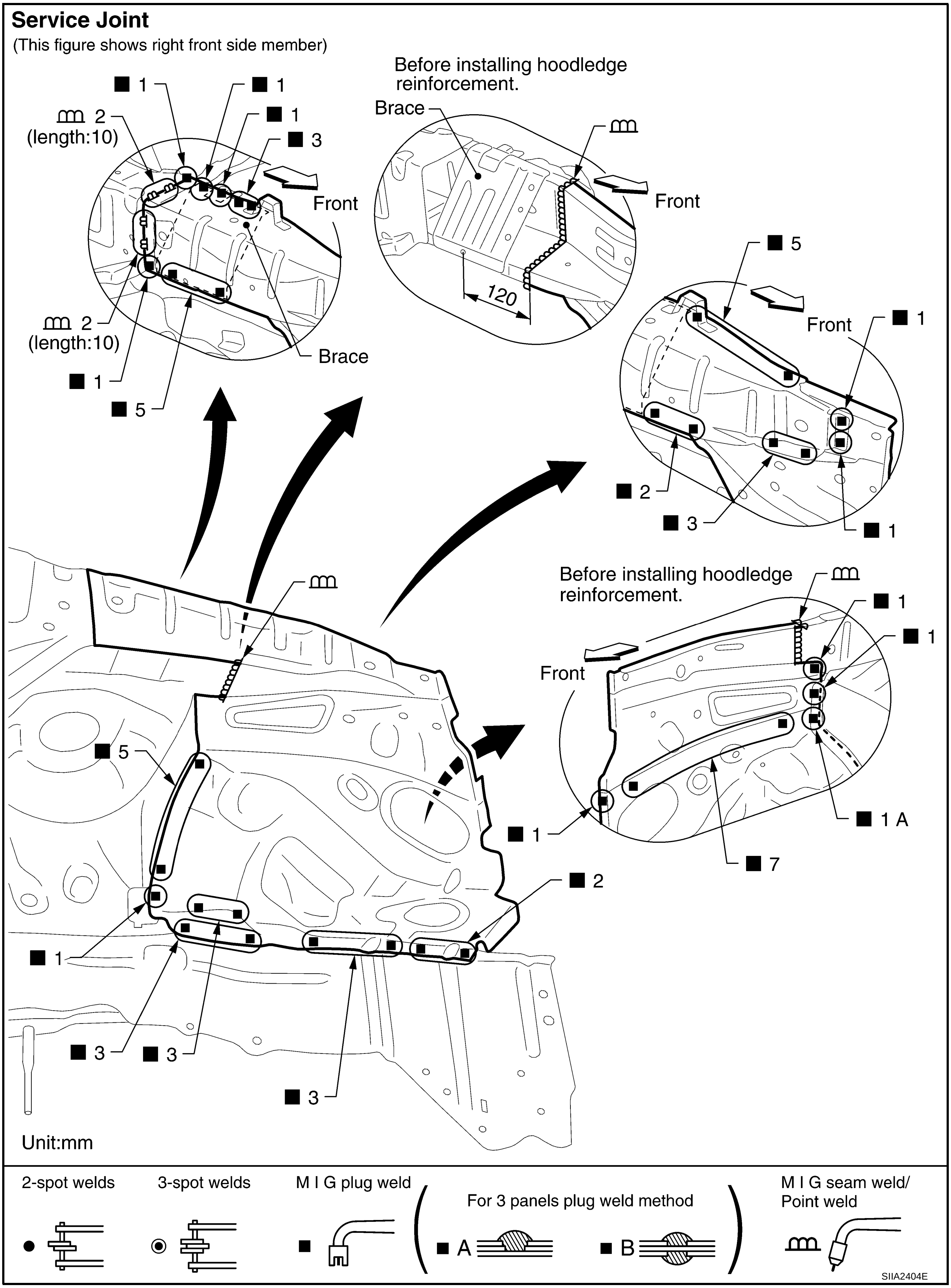

Change parts

- Front hoodledge reinforcement (RH)
- Upper hoodledge (RH)
- Lower front hoodledge (RH)

FRONT SIDE MEMBER

- Work after hoodledge and radiator core support have been removed.

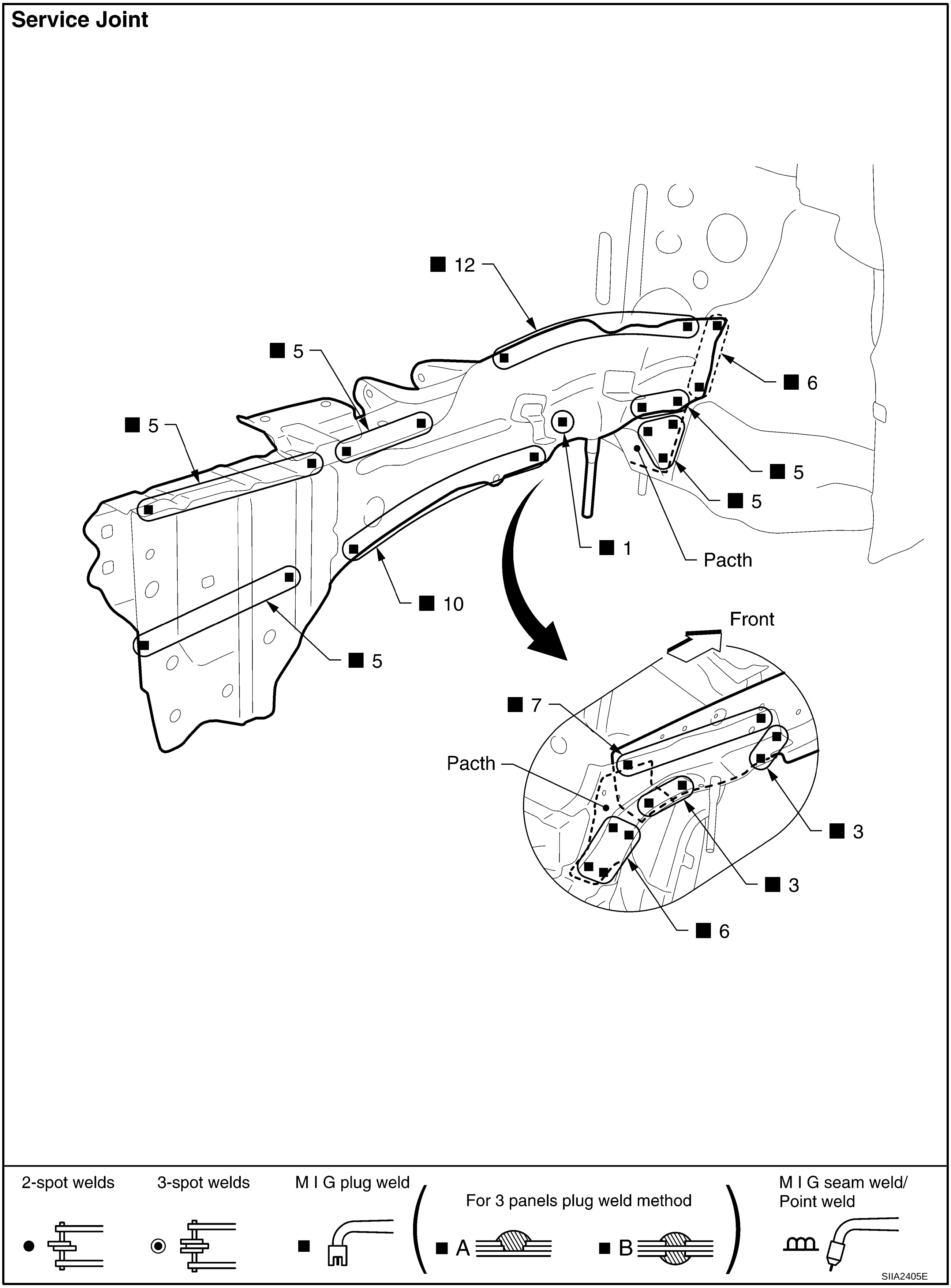

Change parts

- Front side member (LH)
- Front side member closing plate assembly (LH)

FRONT SIDE MEMBER (PARTIAL REPLACEMENT)

- Work after radiator core support has been removed.

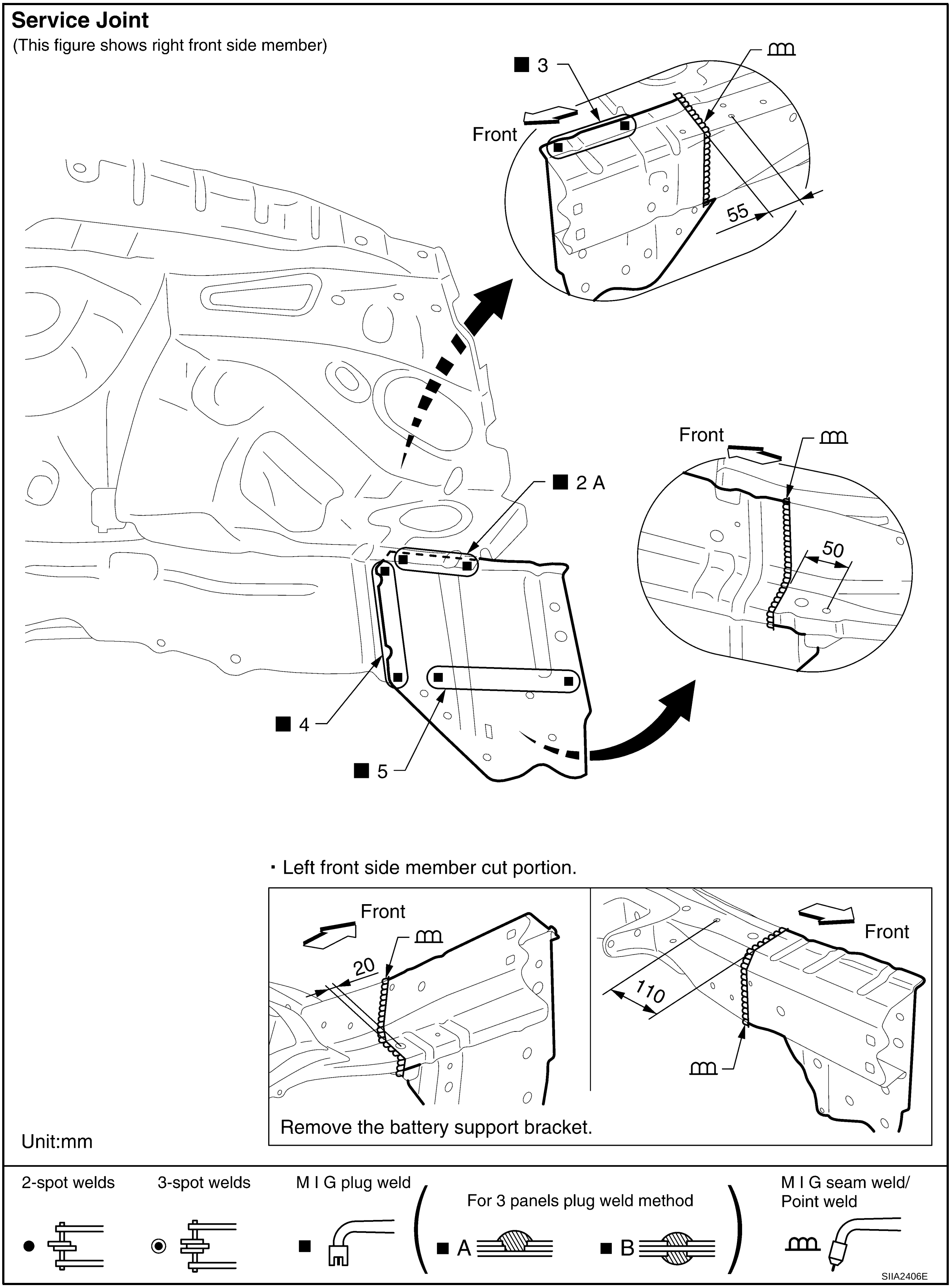

Change parts

- Front side member (RH)
- Front side member front closing plate (RH)

FRONT PILLAR

- Work after hoodledge reinforcement has been removed.

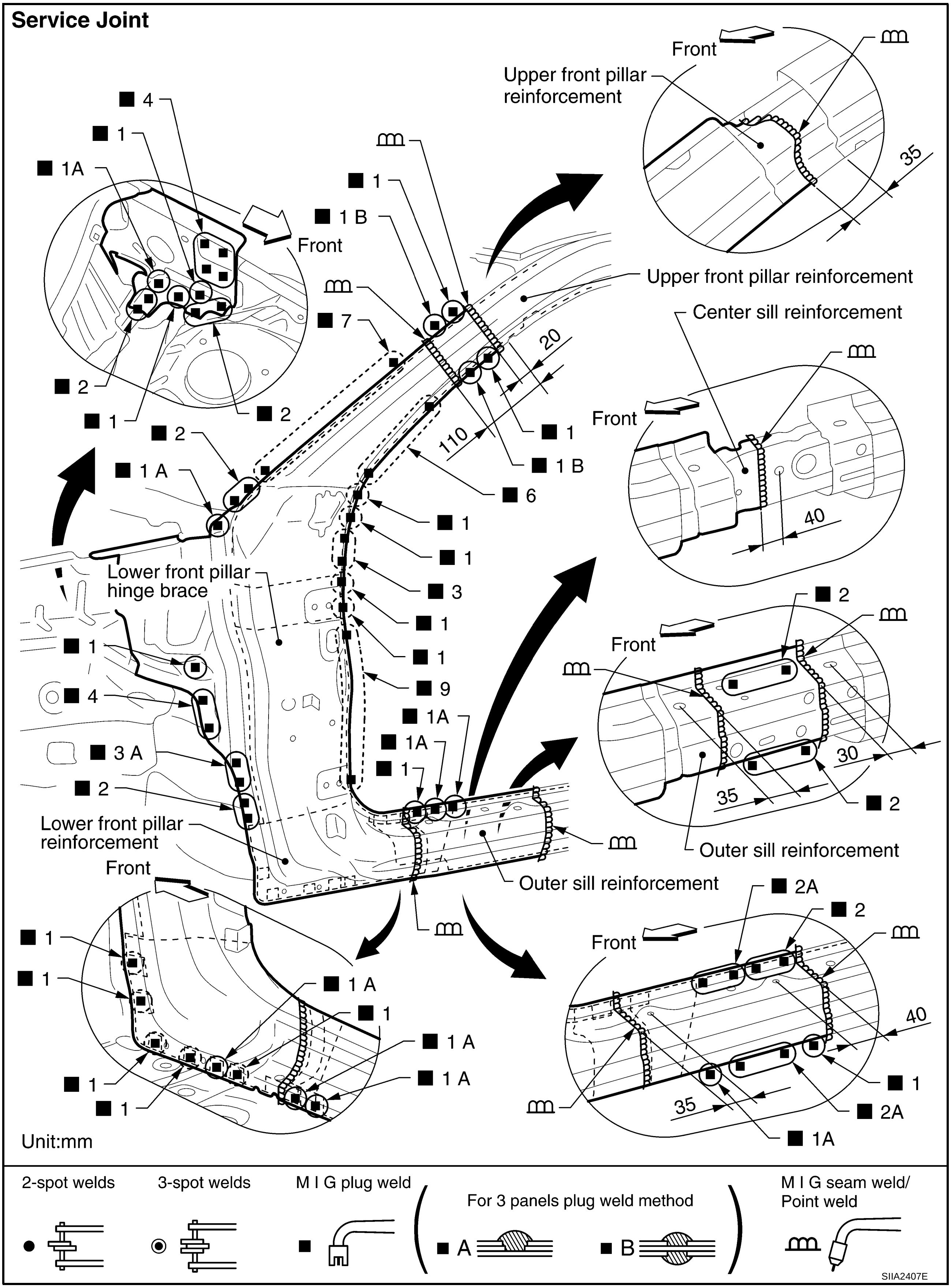

Change parts

- Side body assembly (LH)
- Inner upper front pillar assembly (LH)
- Side cowl top (LH)
- Side dash (LH)
- Lower front pillar reinforcement (LH)

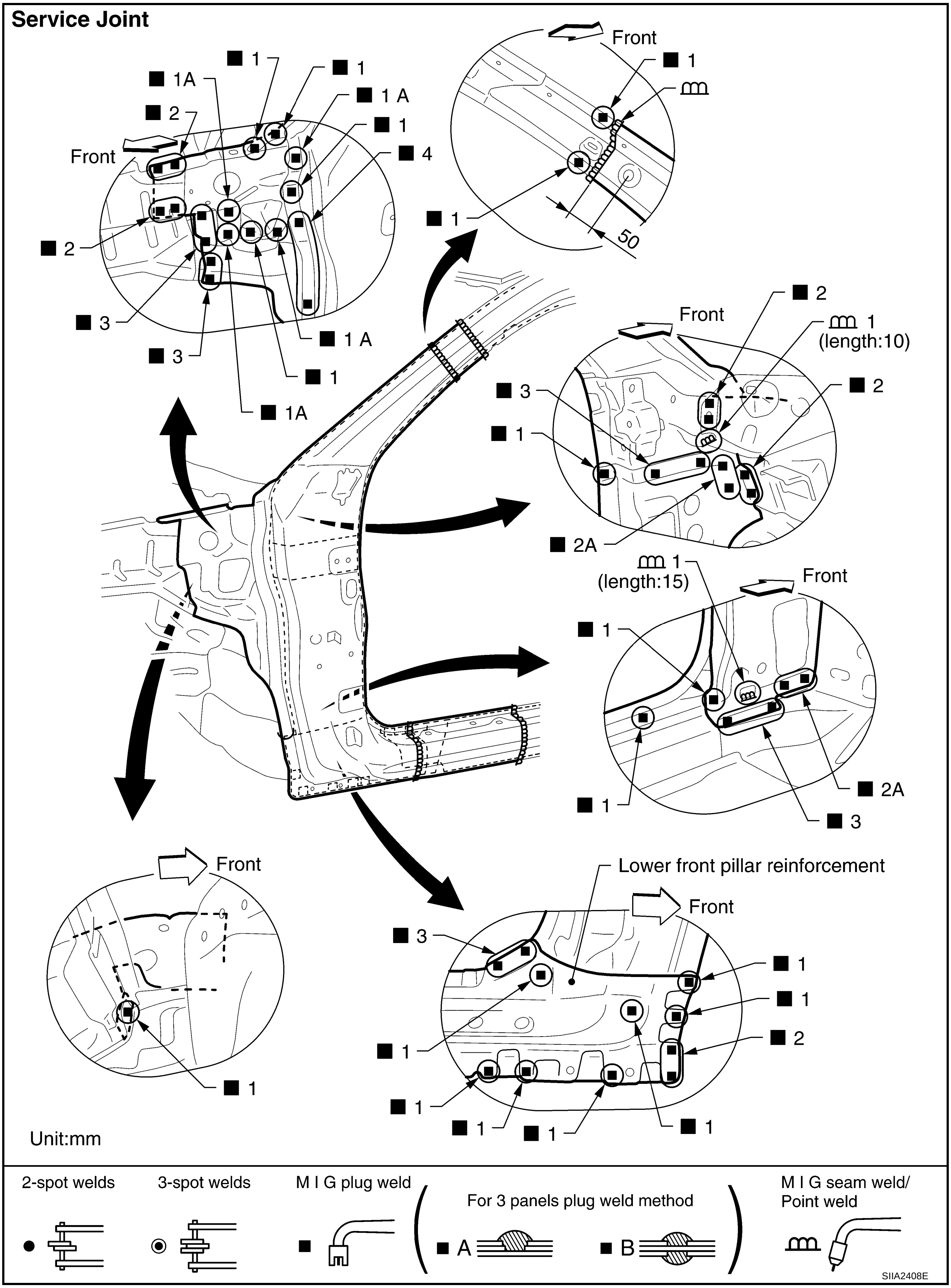

CENTER PILLAR

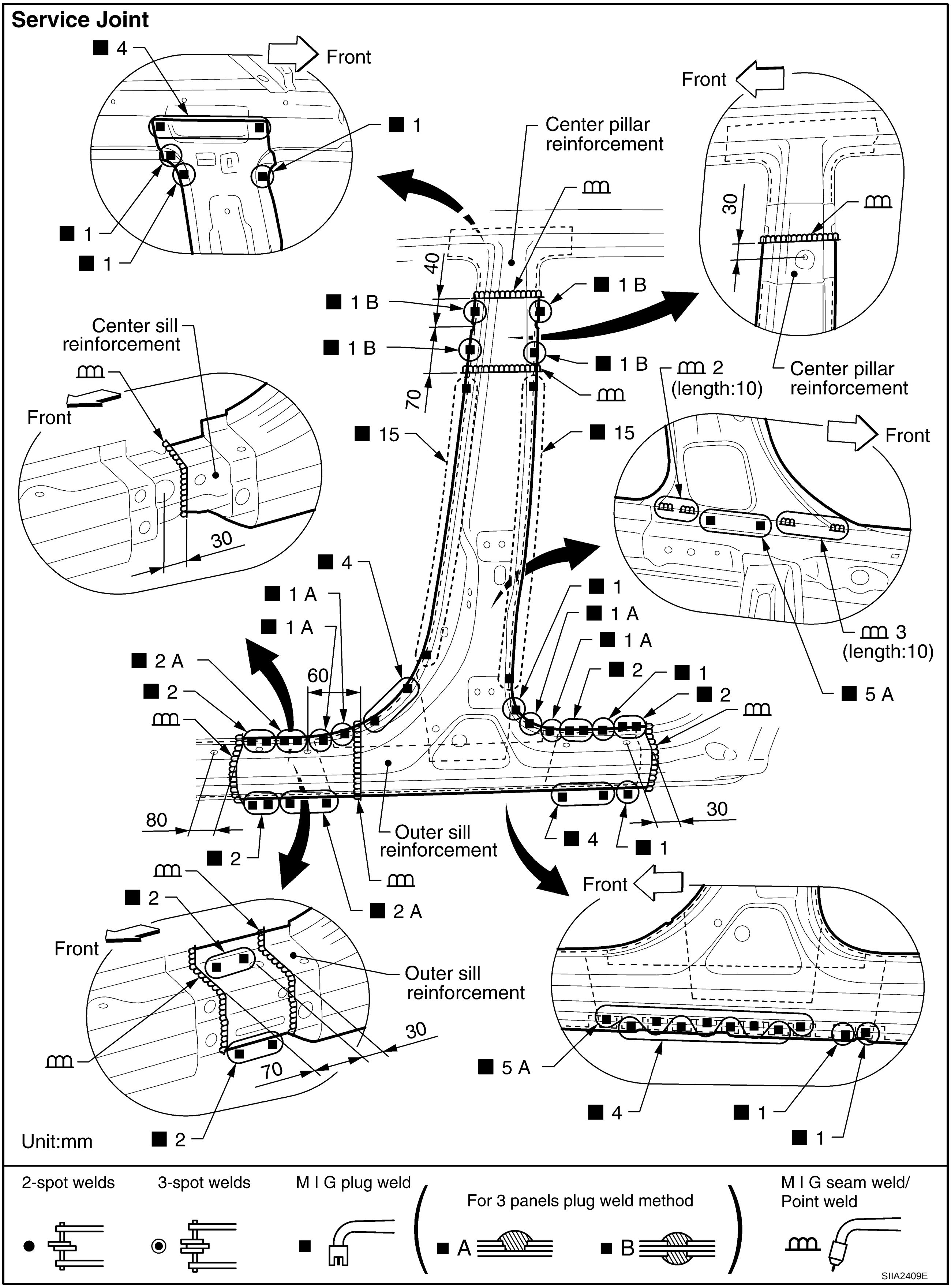

Change parts

- Side body assembly (LH)
- Inner center pillar (LH)

OUTER SILL

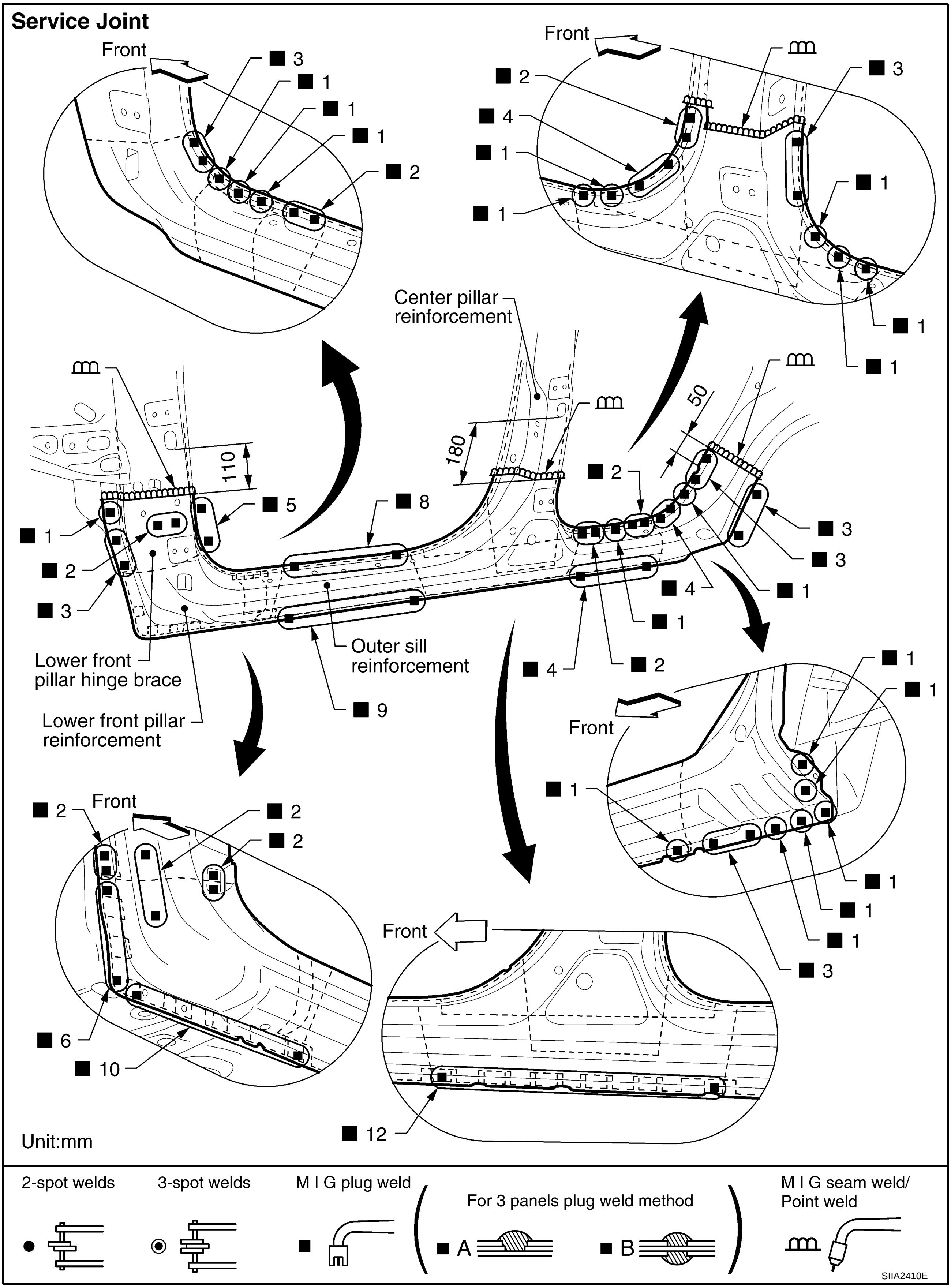

Change parts

- ● Outer sill assembly (LH)

REAR FENDER

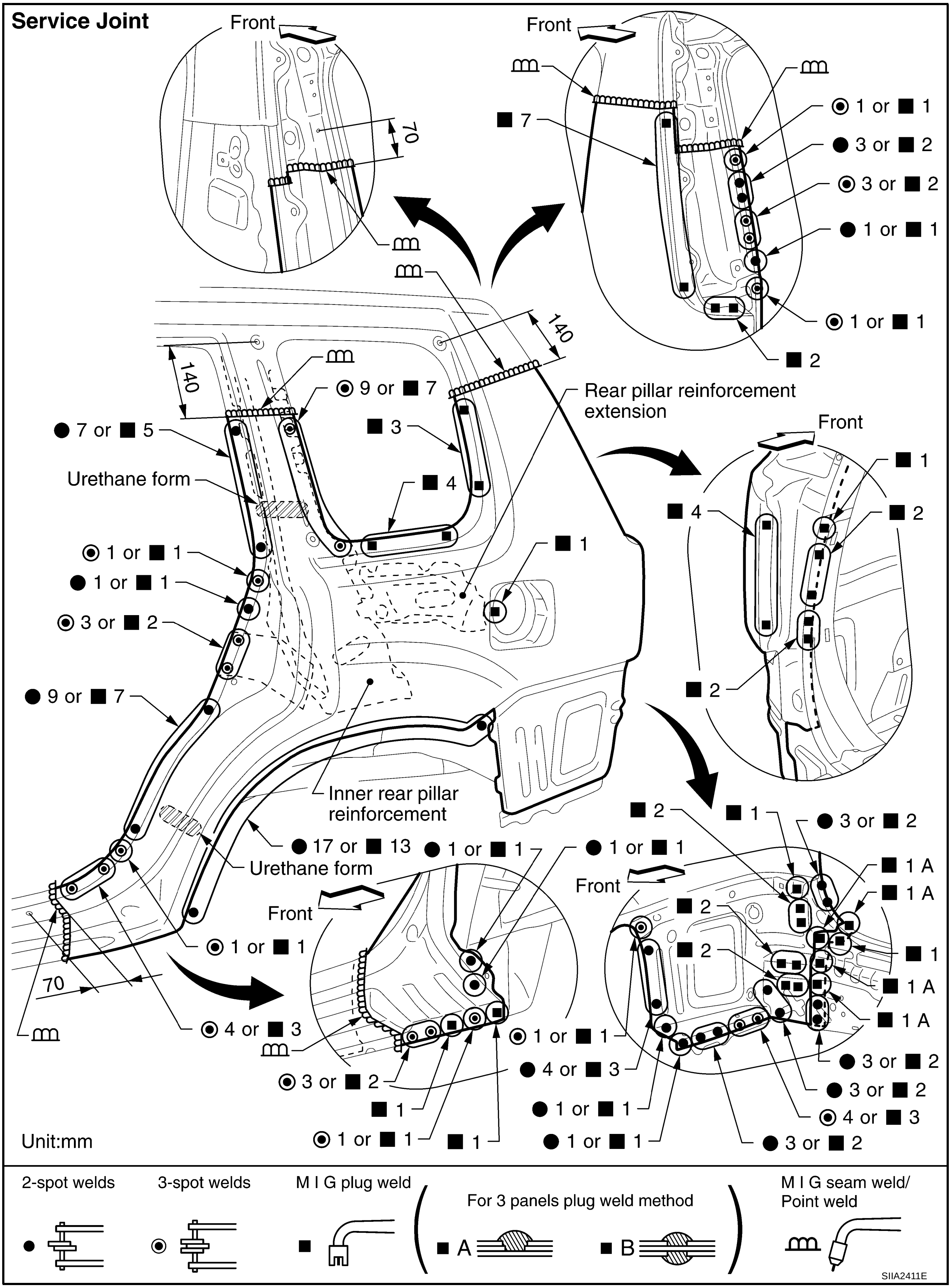

Change parts

- ● Rear fender assembly (LH)
- ● Rear combination lamp base (LH)

REAR PANEL

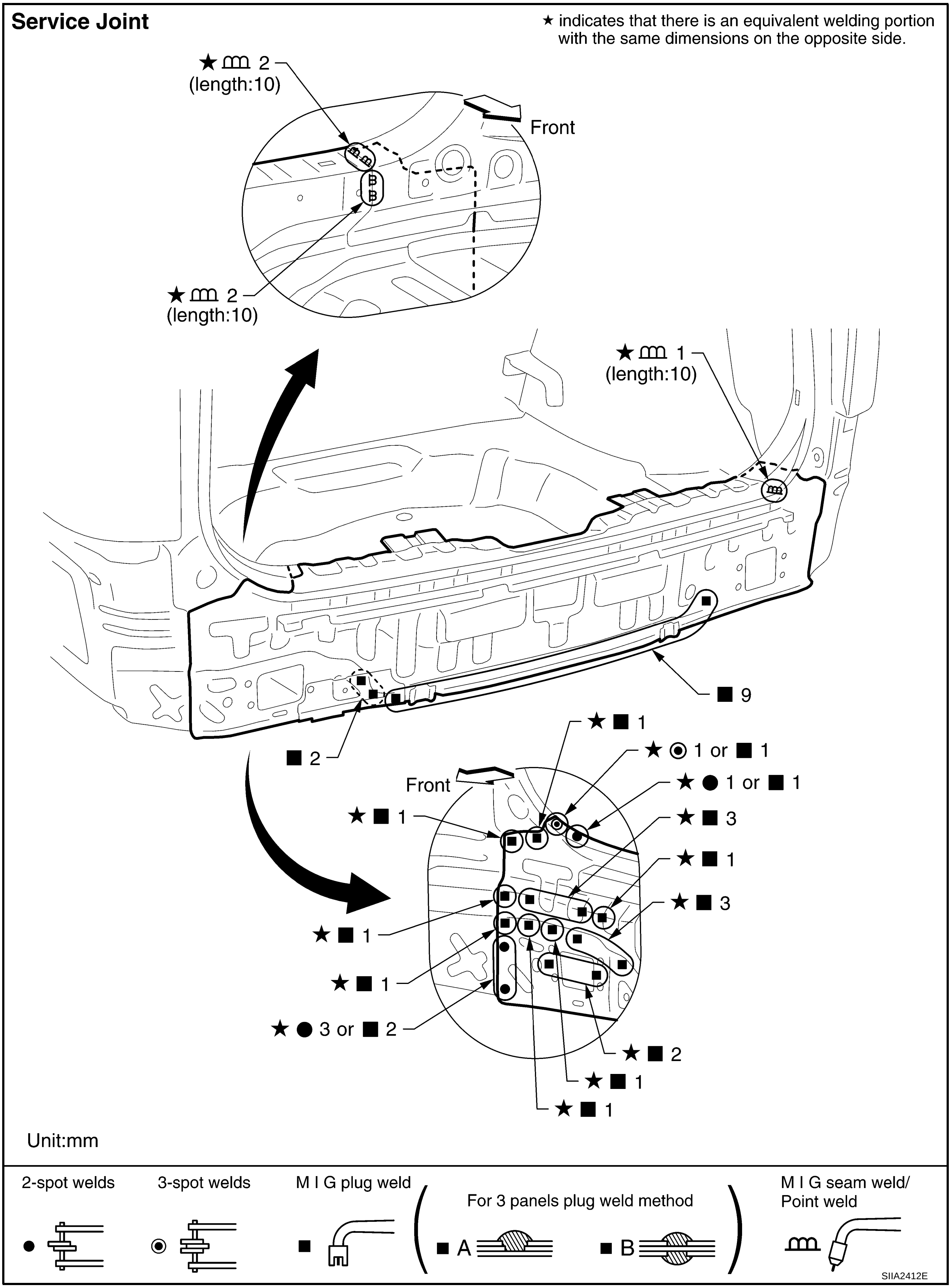

Change parts

- Rear panel assembly

REAR FLOOR REAR

- Work after rear panel has been removed.

Service Joint

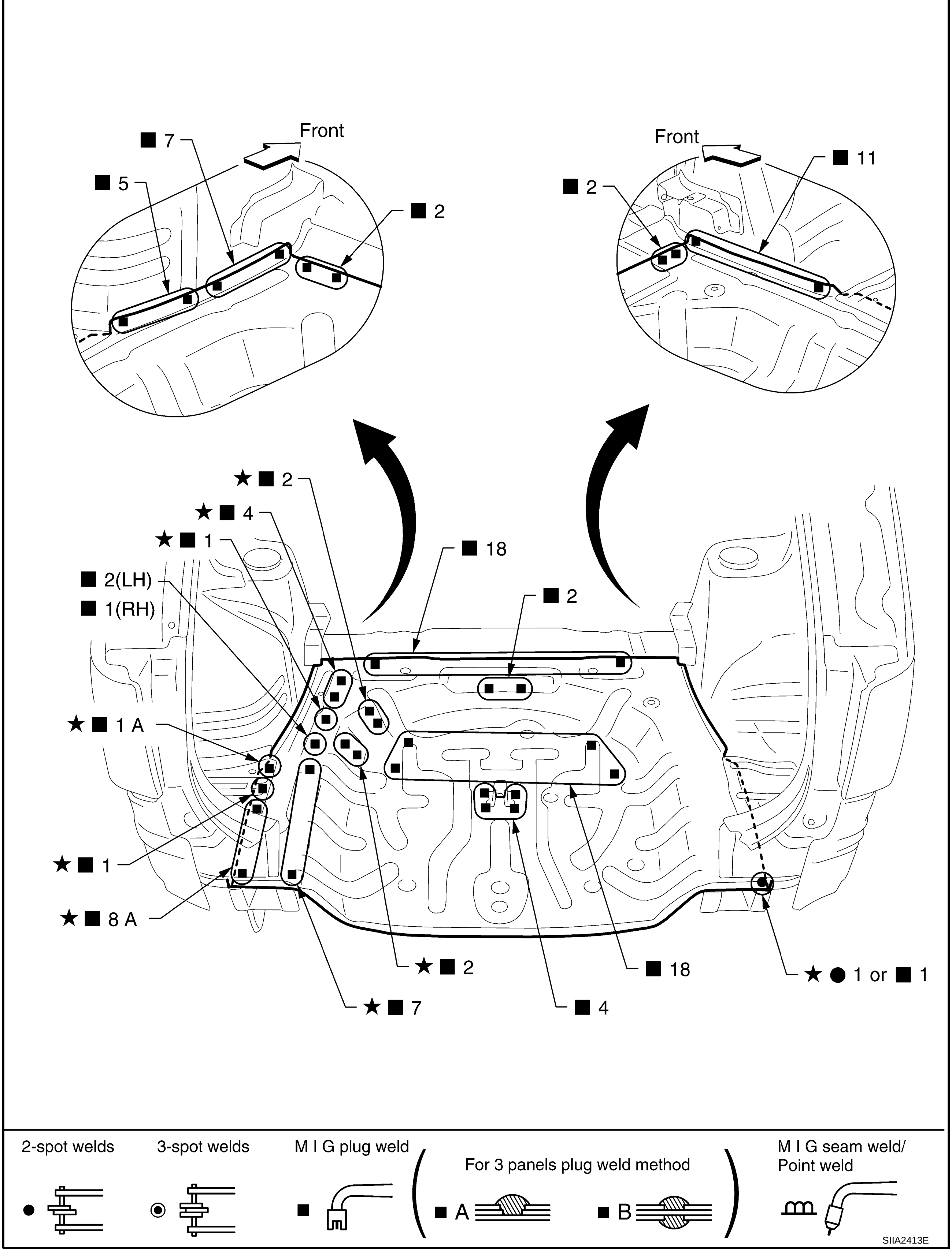

Change parts

- Rear floor rear
- Spare tire clamp bracket

REAR SIDE MEMBER EXTENSION

- Work after rear panel has been removed.

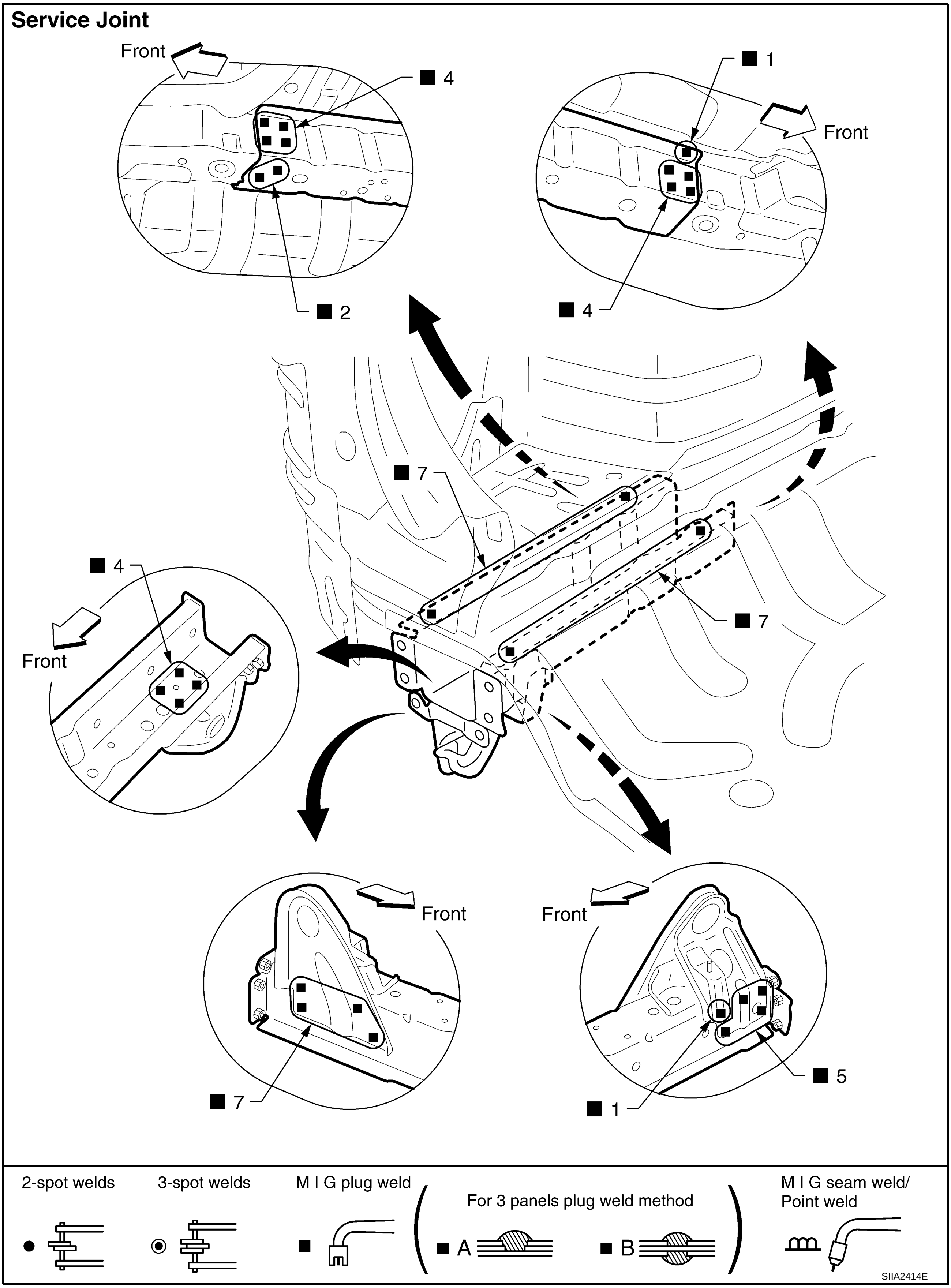

Change parts

- Rear side member extension (LH)
- Rear hook (LH)